FIG. 1B

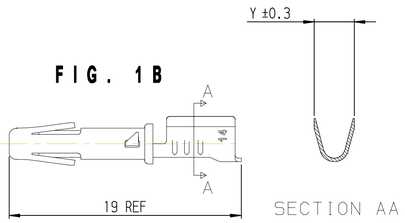

VIEW C

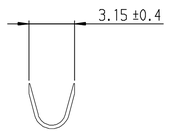

FIG. 2B

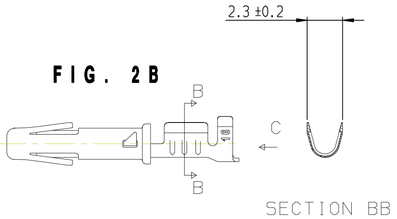

VIEW E

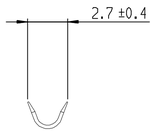

FIG. 3B

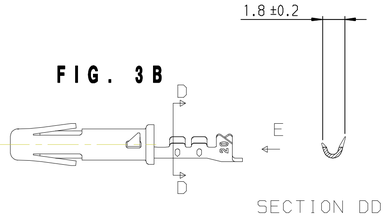

VIEW G

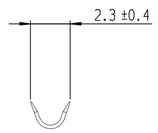

FIG. 4B

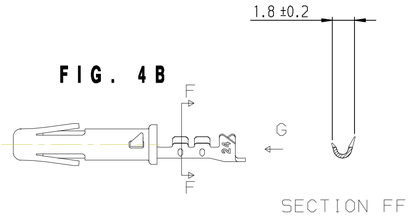

FIG. 1A

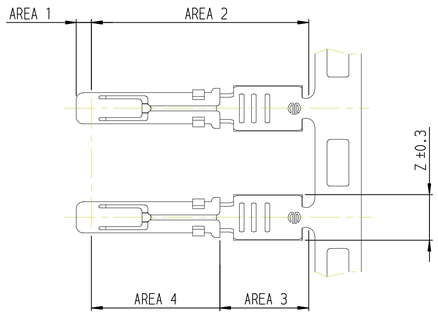

FIG. 2A

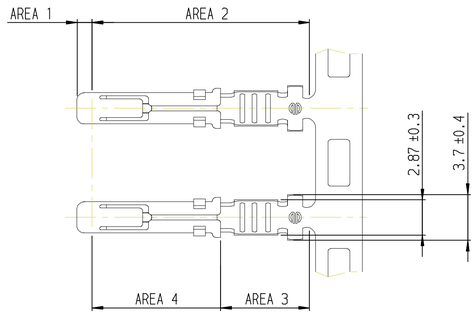

FIG. 3A

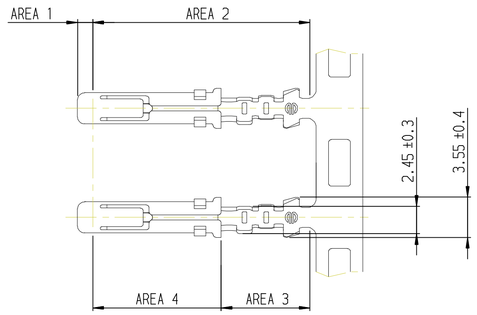

FIG. 4A

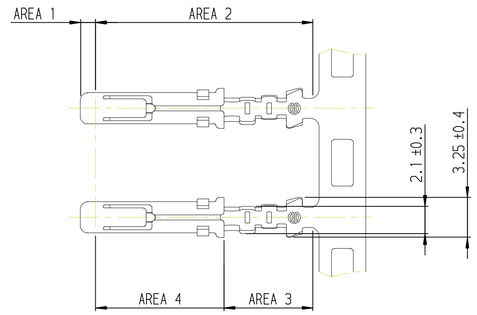

FEMALE CONTACT CAT. N°	FIG.	Z	Y	WIRE SIZE AWG	WIRE SIZE MM²	WIRE INSUL. DIAM. IN MM.	WIRE STRIP LENGTH IN MM.	HAND CRIMP TOOLING DIE SET	HAND CRIMP TOOLING HANDTOOL FOR LOOSE PIECE	EXTRACTION TOOL
SC24M1* / SC24M1*REV	4A			26/24	0.12/0.25	0.90/1.60	4.0			
SC24ML1*	4B							S16SCM20	SHANDLES	
SC20M1* / SC20M1*REV	3A			22/20	0.32/0.50	1.20/2.10	4.0			
SC20ML1*	3B							S16SCM20	SHANDLES	
SC16M11* / SC16M11*REV	2A			18/16	0.82/1.50	3.0 Max	4.65			
SC16ML11*	2B							S16SCML11	SHANDLES	RX2025GE1
SC16M1* / SC16M1*REV	1A	2.87	2.3	18/16	0.82/1.50	3.2 Max	6.35			
SC16ML1*	1B							S16SCML1	SHANDLES	
SC14M1* / SC14M1*REV	1A	3.3	3.3	14	2.10/2.50	3.2 Max	6.35			
SC14ML1*	1B							S16SCML1	SHANDLES	

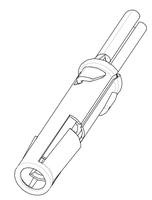

* PLATING

: S6 = 0.75 µ GOLD MIN. OVER Ni (AREA 1)
: GOLD FLASH OVER Ni (AREA 2)

: D70 = 0.13 µ GOLD MIN. OVER Ni (AREA 1)
: GOLD FLASH OVER Ni (AREA 2)

: TK6 = 0.5-2.5 µ Sn PRE-PLATED (AREA 1+ 2)

For standard winding — SEE FIG.1B-2B-3B-4B

: S18 = 0,75 µ GOLD MIN OVER Ni (AREA 1)
1,3 µ MINI Sn OVER Ni (AREA 3)
1,3 µ MINI Ni (AREA 4)

: S31 = GOLD FLASH OVER Ni (AREA 1)
1,3 µ MINI Sn OVER Ni (AREA 3)
1,3 µ MINI Ni (AREA 4)

For standard winding only — SEE FIG.1B-2B-3B-4B

: D70REV = 0.13 µ GOLD MIN. OVER Ni (AREA 1)
1,3 µ MINI Sn OVER Ni (AREA 3)
1,3 µ MINI Ni (AREA 4)

For reverse winding

CONSTRUCTION

CONTACT BODY : HIGH CONDUCTIVITY COPPER ALLOY.
OUTER SPRING : STAINLESS STEEL.

PACKING CONTACTS ON STANDARD STRIP : 3000 PCS. PER REEL, E.G. SC16M11*
PACKING CONTACTS ON REVERSE STRIP : 3000 PCS. PER REEL, E.G. SC16M11*REV
FOR WINDING DIRECTION ON REEL (STANDARD OR REVERSE) : SEE BS.C.202338.004

PACKING LOOSE PIECE CONTACTS : 100 PCS PER STD. PACKING. E.G. SC16ML11*

CONNECTOR ACCOMMODATION

THESE CONTACTS CAN BE USED IN ANY CONTACT POSITION IN ANY CONNECTOR IN THE TRIM TRIO INTERCONNECTION SYSTEM : MSM - MSG - MB RECTANGULAR CONN. , SMS QIKMATE CONN. , UTO - UTS - UTL - UTG AND UTP - MBG CIRCULAR CONN.

PERFORMANCE CHARACTERISTICS

CURRENT RATING : 13 A
CONTACT RESISTANCE : <= 6 m Ohm
OPERATING VOLTAGE : 750 V RMS

CONTACT RETENTION IN BODY : 65 N MIN.
INDIVIDUAL INSERTION FORCE : 3.5 N MAX.
INDIVIDUAL WITHDRAWAL FORCE : 0.55 N MIN.

Country	Jurisdiction & Control_List
FR	NOT LISTED

CUSTOMER DRAWING

IND	DATE	LIBELLE	EMIS PAR	CONTROLE PAR	N°DIFFUSION
E	24/10/16	Update of the cartridge	TESSIER		-

DEFINI PAR : R. Verbeek LE: 11-06-86 TYPE DE PLAN: CUSTOMER DRAWING
VERIFIE PAR: - LE: -
LES COTES S'ENTENDENT AVANT PROTECTION / FINITION

DENOMINATION: FEMALE FORMED TWO PIECE CONTACT SC--M---

ECHELLE 1/1 | TOLERANCES GENERALES ANGULAIRES: ± - ° LINEAIRES : ± - | MATIERE: - N°: - PROTECTION: - CODE: -

USINAGE GENERAL ETAT DE SURFACE | DEFAUTS DE GEOMETRIE VOIR NF E 04-552 | REFERENCE MATERIEL - | AFFAIRE TT

SOURIAU www.souriau.com

CE DOCUMENT EST LA PROPRIETE DE SOURIAU
IL NE PEUT ETRE REPRODUIT OU COMMUNIQUE SANS SON AUTORISATION

FORMAT A1 | REFERENCE PLAN BS-C-200178-002 | FOLIO 1/1

Downloaded from Arrow.com.