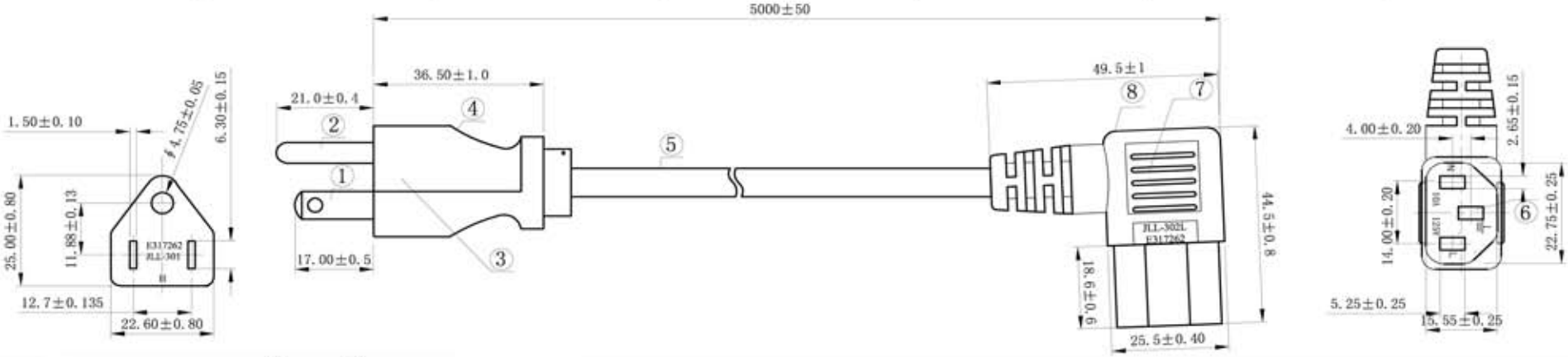

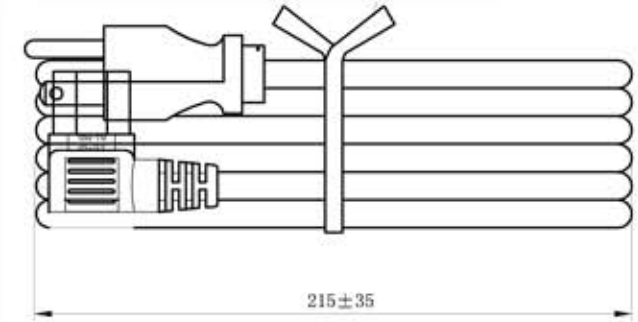

E243711 (LL) SVT 3×18AWG(0.824mm²) VW-1 60℃ 300V CSA 228191 SVT
3×18AWG(0.824mm²) FT2 60℃ 300V -LF-

NOTES:

1) JACKET COLOR: BLACK
2). E-GREEN; L-BLACK ; N-WHITE

TESTING:

1) 100% OPEN & SHORT TESTING
2) INSULATION RESISTANCE:100M ohm(min)
3) VOLTAGE:DC500V/1min
4) ROHS COMPLIANT

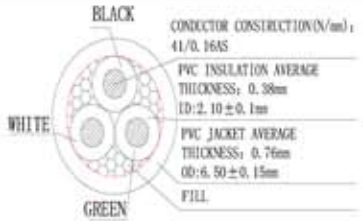

NO.	SPECIFICATION	COLOUR	MATERIAL	AMOUNT
①	Load terminals 98661	Silver	Cu	2P
②	Grounding terminal 97475	Silver	Cu	1P
③	Model aircraft 8661AN-3P	WHITE	PBT	1PCS
④	Plug JLL-301	BLACK	PVC Cu	1PCS
⑤	Wire SVT 18AWG/3C 60℃	BLACK	PVC Cu	1PCS
⑥	Play home terminal 98740	Silver	Cu	3P
⑦	Model aircraft 8745AND	WHITE	PBT	1PCS
⑧	Mother Play JLL-302L	BLACK	PVC Cu	1PCS
⑨	Ties	BLACK		1PCS

Scale	1:1
TOLERANCE	
X.X	±0.40
X.XX	±0.25
X.XXX	±0.15
Angle	±3°

Modification	Date	Name

		Name
Drawn	3/26/12	Miller
Approved	3/26/12	Warner

Item No. **A-PC2304-050021-1**

Title 5-15P to 320C13 R/A, 5M, SVT#18*3C 60C

Drawing No.

rev00

Replace

Sheet

RoHS Compliant

ASSMANN WSW components