RoHS Compliant

ZONE	ECN.NO.	DESCRIPTION	DRAWING	DATE
A		INITIAL	林生财	2023.11.24

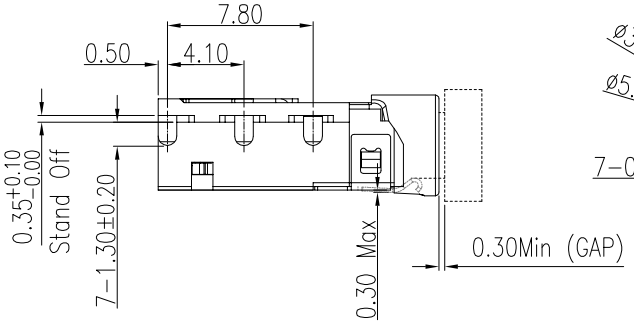

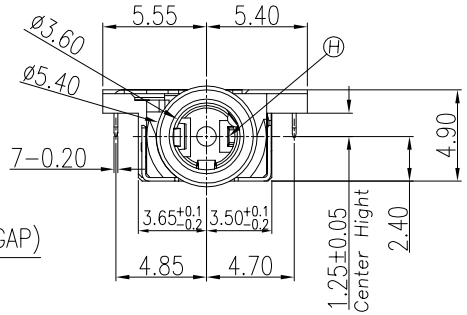

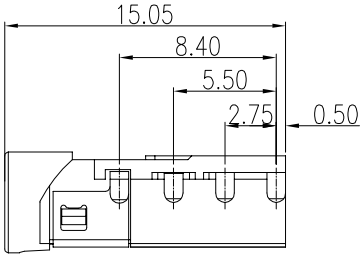

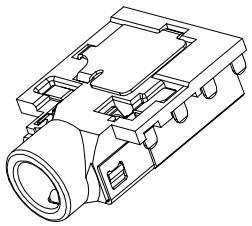

3D VIEW

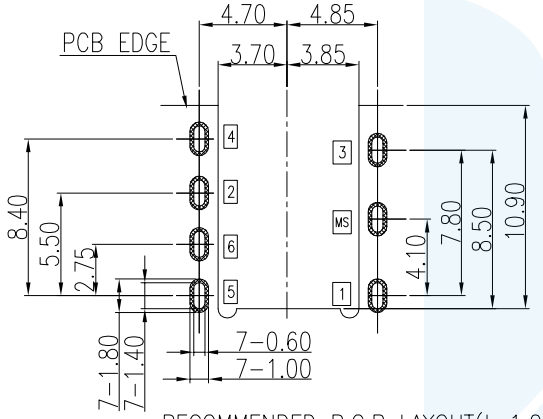

RECOMMENDED P.C.B LAYOUT(t=1.0mm)
TOP VIEW (TOLRANCE:±0.05)

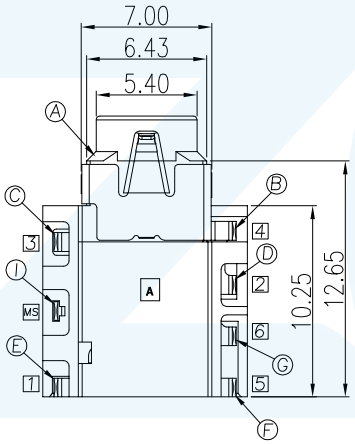

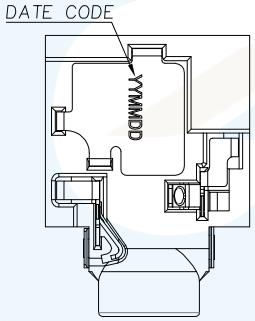

NOTES:
1. MATERIAL: SEE "TABLE 1";
2. FINISH: SEE "TABLE 1";
3. ELECTRICAL:
   3.1. VOLTAGE RATING: 12 VAC RMS;
   3.2. CURRENT RATING: 1 AMP;
   3.3. CONTACT RESISTANCE: 50mΩ Max.(Initial), 100mΩ Max.(After Life test);
   3.4. INSULATION RESISTANCE: 100 MΩ Min., 500VDC.(Initial), 50 MΩ Min., 500VDC.(After Humidity test);
   3.5. WITHSTAND VOLTAGE: 500 VAC RMS 50(60)Hz, 1 minute;
4. MECHANICAL:
   4.1. MATING FORCE: 0.5-2.2Kgf.(Initial); 0.4-2.2Kgf.(After Life test);
   4.2. UNMATING FORCE: 0.5-2.0Kgf.(Initial); 0.4-2.0Kgf.((After Life test);
   4.3. OPERATING LIFE: 5000 CYCLES MIN.;
5. ENVIRONMENTAL:
   5.1. SALT SPRAY: 48H.
   5.2. OPERATION: -30°C~+80°C.

TABLE 1:

NO.	DESCRIPTION	QTY	MATERIAL	REMARK
I	Shild shell MS	1	PHOSPHOR BRONAE, 0.20t	Welding Ni 50u"Min Overall
H	Insulator	1	HIGH TEMP LCP	Black
G	Make Spring 6	1	PHOSPHOR BRONAE, 0.20t	Au G/F Min on contact area All over Ni 50u"Min
F	Transfer Spring 5	1	PHOSPHOR BRONAE, 0.20t	
E	Tip spring 1	1	PHOSPHOR BRONAE, 0.20t	Au 1u" Min on contact area, Au G/F Min on solder area All over Ni 50u"Min
D	Ring spring 2	1	PHOSPHOR BRONAE, 0.20t	
C	Ring spring 3	1	PHOSPHOR BRONAE, 0.20t	
B	Earth spring 4	1	PHOSPHOR BRONAE, 0.20t	Au G/F Over All , Ni 50u"Min underplated.
A	Housing	1	HIGH TEMP PA10T	Black

PLUG SPEC

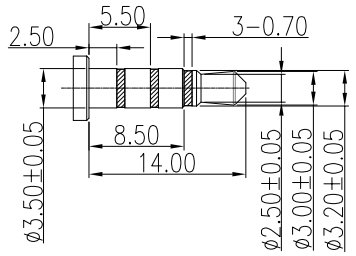

SCHEMATIC

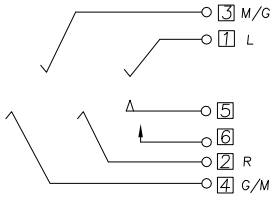

AFTER INSERT SCHEMATIC

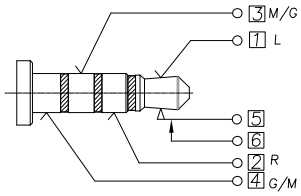

LZG INDUSTRIAL CO. LTD

DRAWING:	林生财	DATE:	2023.11.24	SCALE	1:1
CHECK:	李宏鑫	DATE:	2023.11.24	MATERIAL	*
APPROVAL:	杨进宝	DATE:	2023.11.24	DWG. NO.	
DRAWING NO.	ZB23024-07FBAP-A			SHEET	1/2

PART NAME	ø3.50mm PHONE JACK	TOLERANCE UNLESS OTHERWISE SPECIFIED:	0.0±0.25 0.00±0.15 0.000±0.05	0.°±2° 0.0°±1° 0.00°±0.5°	UNIT: mm
PART NO.	ZB23024-07FBAP-A				

RoHS Compliant

ZONE	ECN.NO.	DESCRIPTION	DRAWING	DATE
A		INITIAL	林生财	2023.11.24

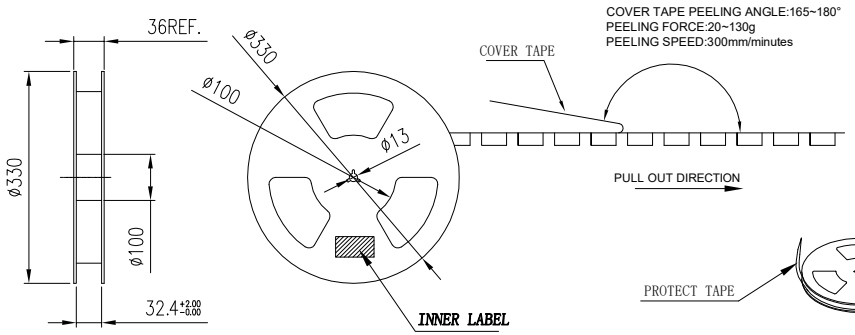

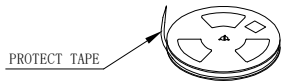

TOTAL 8 DISK

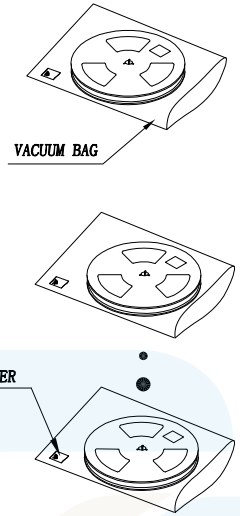

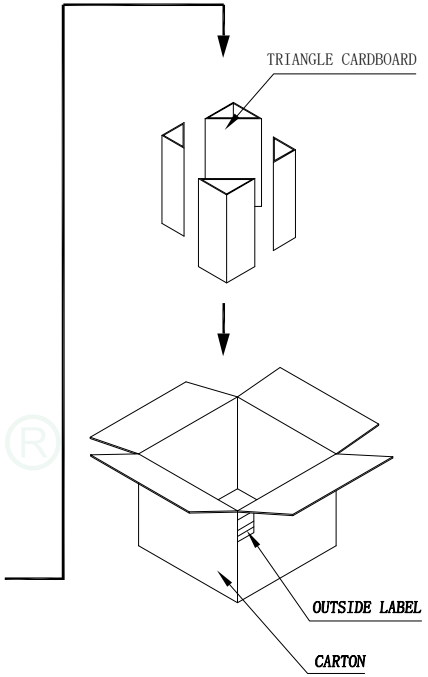

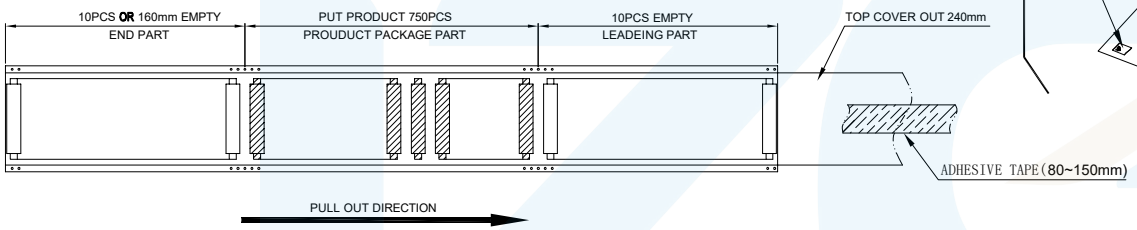

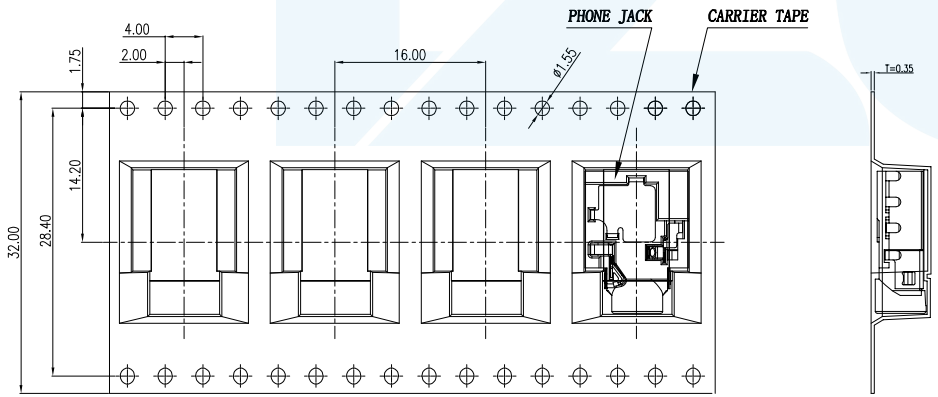

NOTES:

1. Material requirements:
   1.1 The carton material requirements for the K=A, Dimension is 350*340*310MM;
   1.2 Reel materials for PS; size reel for 330*32.4。
2. Packaging requirements:
   2.1 The tape into the packing machine, before the empty 10PCS, after the release of the product 750PCS, then the empty 10PCS with 160MM length of stay;
   2.2 Top cover should out 240mm of the carrier tape. After winding, using adhesive tape(80-150mm) to stick the leader of cover tap on the side of the carrier tape;
   2.3 Winding a protect tape arroud the reel, then stick it by adhesive tape;
   2.4 label should paste in the designated area of the reel;
   2.5 Put a dryer and a packed reel in the vacuum bag and make the vacuum process;
   2.6 The tired folded 8 disks in the carton total 6Kpcs;
   2.7 Packed finished packing sealing, and in the outer carton label

LZG INDUSTRIAL CO. LTD

DRAWING:	林生财	DATE:	2023.11.24	SCALE	1:1
CHECK:	李宏鑫	DATE:	2023.11.24	MATERIAL	*
APPROVAL:	杨进宝	DATE:	2023.11.24	DWG. NO.	
DRAWING NO.	ZB23024-07FBAP-A			SHEET	2/2

PART NAME	Ø3.50mm PHONE JACK	TOLERANCE UNLESS OTHERWISE SPECIFIED:	0.0±0.25 0.00±0.15 0.000±0.05	0.°±2° 0.0°±1° 0.00°±0.5°	UNIT: mm
PART NO.	ZB23024-07FBAP-A				