REVISIONS					
REV.	ECN NO.	LOCATION	DESCRIPTION	DATE	DESIGN
A1	N/A		图框升级整理图面	2024.08.03	阿 树

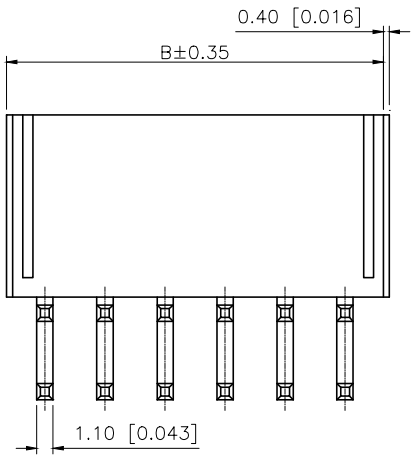

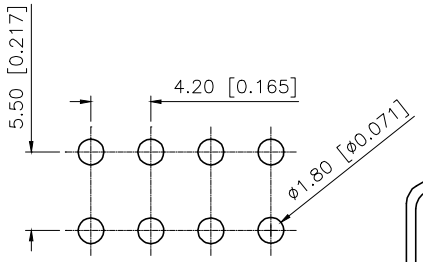

PCB LAYOUT

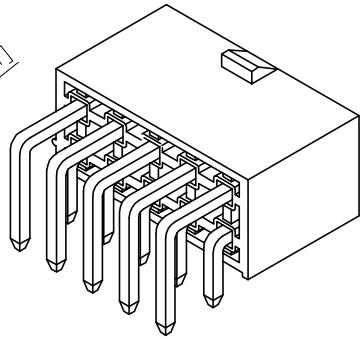

■SPECIFICATIONS
- •Voltage rating:600V AC/DC
- •Current rating:9A AC/DC
- •Withstanding Voltage:1500V AC/minute
- •Temperature range:−45°C+125°C
- •Insulation resistance:≥1000MΩ
- •Contact resistance:≤10mΩ

PART NO.:

X9357 W R−2x11 LP−SW
① ② ③ ④ ⑤ ⑥

① Series No
② Category:W−Wafer
③ Welding Board angle:R−Stright 90°
④ Row No.Pin No:2xXX−2x01P~2x12P
⑤ Plug the PIn&Specal NO.:
ES−With Ears and Screw Holes
⑥ Material:LP−LCP 94V−0
⑦ Plating:SW−Matte Tin

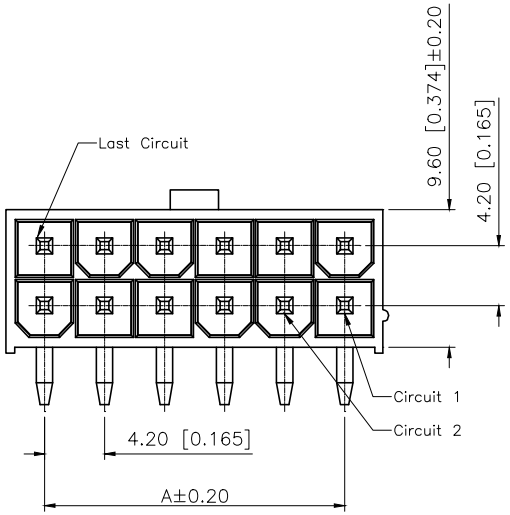

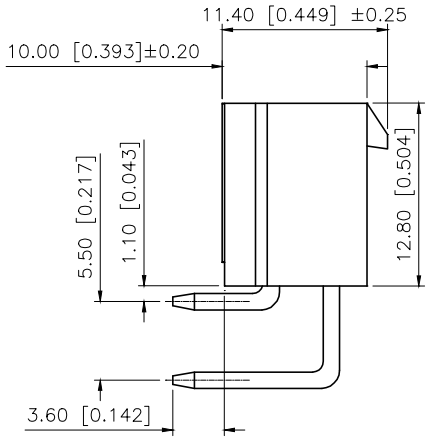

Poles	Dimensions(mm)		Poles	Dimensions(mm)	
	A	B		A	B
2x01		5.40	2x07	25.20	30.60
2x02	4.20	9.60	2x08	29.40	34.80
2x03	8.40	13.80	2x09	33.60	39.00
2x04	12.60	18.00	2x10	37.80	43.20
2x05	16.80	22.20	2x11	42.00	47.40
2x06	21.00	26.40	2x12	46.20	51.60

PART NO	Material	Material(Pin)	Finish(Pin)	Suitable XKB Housing
X9357WR−2x11−LPSW	LCP	Brass	Matte Tin	X9357HM

ANGLAR	±5°
X.	±0.40
X.x	±0.30
X.xx	±0.20
X.xxx	±0.15
UNSPECIFIED TOLERANCES	

XKB INDUSTRIAL PRECISION CO.,LIMITED

DESIGN	阿 树	VIEW:	MODEL TYPE: 4.20 mm Crimp Style Connectors
CHECKED		UNIT: mm/in	PART NO.: X9357WR−2x11−LPSW
APPROVED		SIZE: A4	DWG NO.: X−X9357WR−2x11−LPSW

SCALE	PAGE	REVISION
N/A	1/1	A1