REVISIONS					
REV.	ECN NO.	LOCATION	DESCRIPTION	DATE	DESIGN
A0	N/A		INITIAL RELEASE	/	/
A1	N/A		图面升级整理图面	2024.9.12	阿树

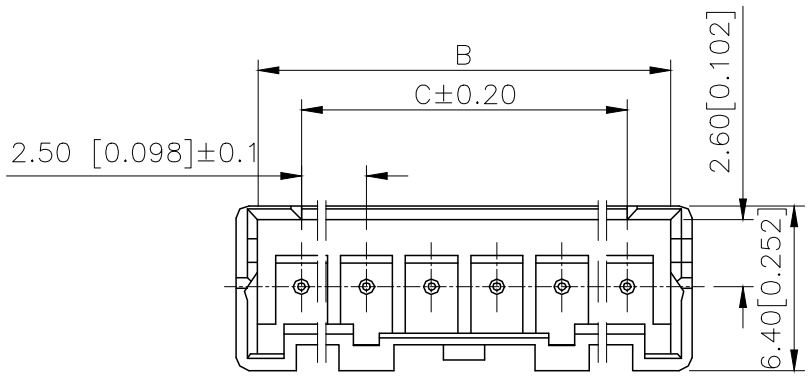

4PIN以上

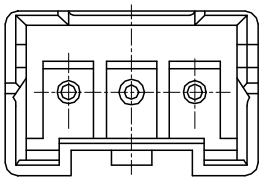

2PIN和3PIN

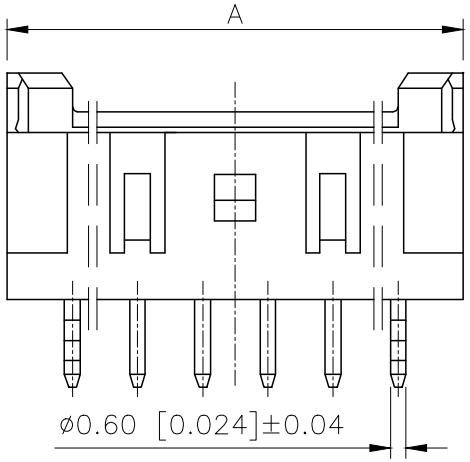

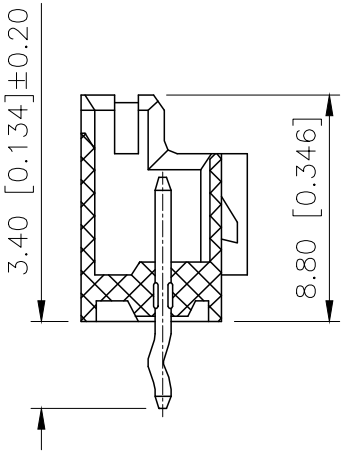

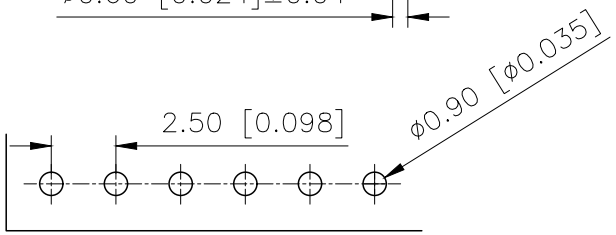

Recommand PCB Layout

■SPECIFICATIONS
- Voltage rating:250V AC/DC
- Current rating:3A AC/DC
- Withstanding Voltage:1500V AC/minute
- Temperature range:−40°C~+125°C
- Insulation resistance:≥500MΩ
- Contact resistance:≤10mΩ
- After environmental testing:≤20mΩ

PART NO.:

X2508 W V−06−N0 SN XX
① ② ③ ④ ⑤ ⑥ ⑦

①Series No
②Category:W−Wafer
③Welding Board Angle:V−Stright 180°
④Row No.Pin No:XX−02~15Pin
⑤Material:N0−PA66 94V−0;N2−PA66 94V−2
⑥Planting:SN−Bright Tin Plating
SN1−Bright Tin Plating
SW−Matte Tin Plating
⑦Color:Blank−natural color;

POLES	A	B	C	POLES	A	B	C
2	7.50	5.80	2.50	9	25.00	23.30	20.00
3	10.00	8.30	5.00	10	27.50	25.80	22.50
4	12.50	10.80	7.50	11	30.00	28.30	25.00
5	15.00	13.30	10.00	12	32.50	30.80	27.50
6	17.50	15.80	12.50	13	35.00	33.30	30.00
7	20.00	18.30	15.00	14	37.50	35.80	32.50
8	22.50	20.80	17.50	15	40.00	38.30	35.00

PART NO	Material	Material(Pin)	Finish(Pin)	Suitable XKB Terminal
X2508WV−06−N0SN	Nylon 66 UL 94V−0	Brass	Tin Plated	X2508H

AuGLAR	±5°
X.	±0.40
X.x	±0.30
X.xx	±0.20
X.xxx	±0.15
UNSPECIFIED TOLERAuCES	

XKB Connection 星创

DESIGN	阿树	VIEW:	MODEL TYPE: 2.50mm Crimp Style Connectors
CHECKED		UNIT: mm/in	PART NO.: X2508WV−06−N0SN
APPROVED		SIZE: A4	DWG NO.: X−X2508WV−06−N0SN

XKB INDUSTRIAL PRECISION CO.,LIMITED

SCALE	PAGE	REVISION
N/A	1/1	A1