FN1-031XX00GW Range

0.3" (7.6 mm) Single Digit 7 Segment Display

Features:

- High segment intensity
- Wide viewing angle
- Range of colours
- Grey face colour
- White segment colour

Available options:

- Alternative face and segment colour
- Alternative font
- Long terminal pins
- Alternative emitting colour
- Low current version

♦ Also available from

Font design

Product not shown actual size

Electro / Optical Characteristics - I_F = 20 mA T_a = 25° C

Part Number Common Cathode	Part Number Common Anode	Emitting Colour	Wavelength	Forward Voltage V_F		Luminous Intensity I_V	
				typical	max	min	typical
FN1-0311L00GW	FN1-0312L00GW	GaAlAs Red	660 Peak	1.85	2.00	-	12
FN1-0311300GW	FN1-0312300GW	HE Red	640 Peak	2.05	2.50	-	3
FN1-0311Y05300GW	FN1-0312Y05300GW	Yellow	591 Peak	2.05	2.40	-	18
FN1-0311200GW	FN1-0312200GW	Green	568 Peak	2.10	2.50	-	5
FN1-0311B2300GW ♦	FN1-0312B2300GW ♦	Blue	470 Dominant	3.20	3.70	-	12
FN1-0311B2200GW ♦	FN1-0312B2200GW ♦	Blue	460 Dominant	3.20	3.70	-	12
Units			nm	V		mcd / seg. (digit average)	

Maximum Ratings T_a = 25° C - Derate above 25° C

Characteristic	Condition	Symbol	Rating	Units
Pulse Forward Current	0.1 duty cycle @ 1KHz	I_{FP}	100	mA
DC Forward Current		I_F	25	mA
Reverse Voltage	I_R = 10 µA	V_R	5	V
Operating Temperature		T_{opr}	- 25 to + 80	° C
Storage Temperature		T_{stg}	- 30 to + 85	° C
Lead soldering temperature	1.6 mm from body - max 3 seconds		260	° C

Note

Industry standard procedures regarding static must be observed when handling product produced with blue die material.

It is the responsibility of the customer to verify the suitability of the product for the application.

© Forge Europa Limited
The Old Railway
Princes Street
Ulverston - Cumbria
LA12 7NQ UK
www.forge-europa.co.uk
sales@forge-europa.co.uk
Tel +44 (0) 1229 580000
Fax +44 (0) 1229 586890

Package Outline

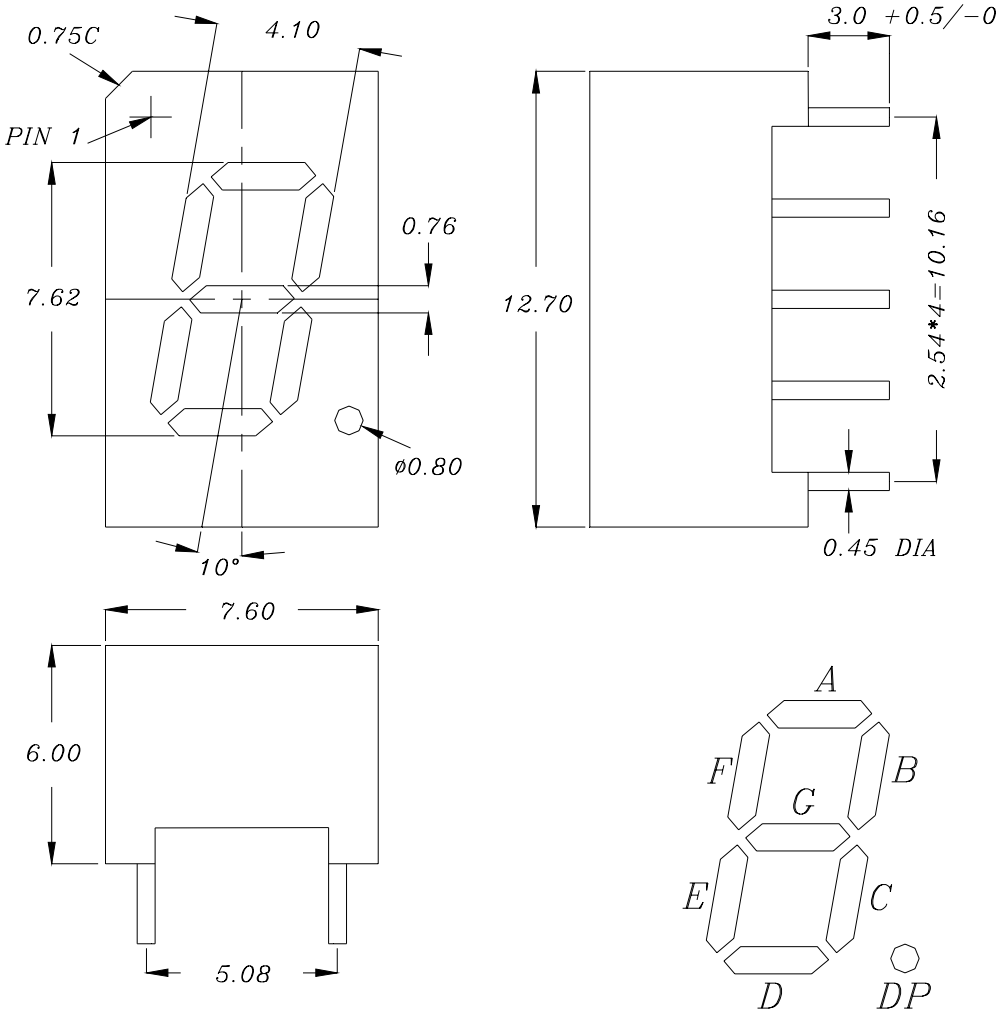

Common Cathode

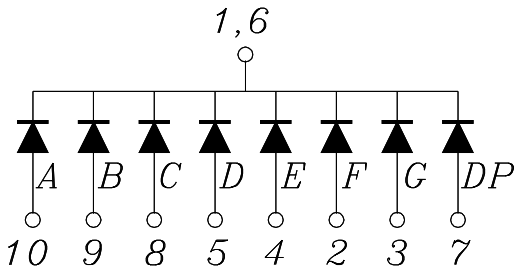

Common Anode

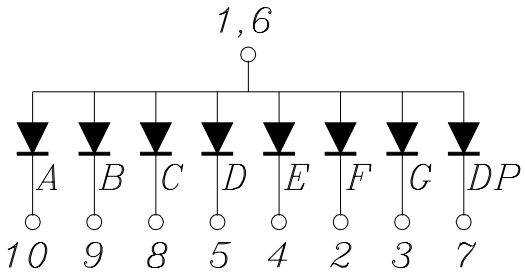

Tolerance ± 0.25 mm unless stated

© Forge Europa Limited
The Old Railway
Princes Street
Ulverston - Cumbria
LA12 7NQ UK
www.forge-europa.co.uk
sales@forge-europa.co.uk
Tel +44 (0) 1229 580000
Fax +44 (0) 1229 586890