REVISIONS					
REV.	ECN NO.	LOCATION	DESCRIPTION	DATE	DESIGN
A0	N/A		INITIAL RELEASE	/	/
A1	N/A			2025.10.17	

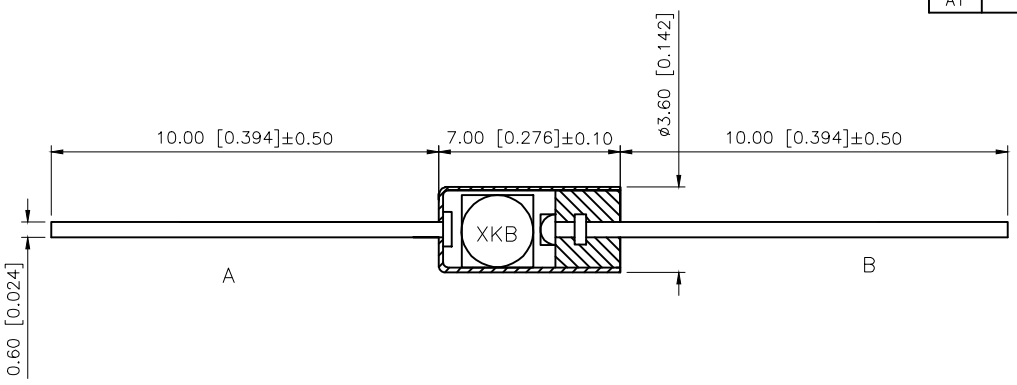

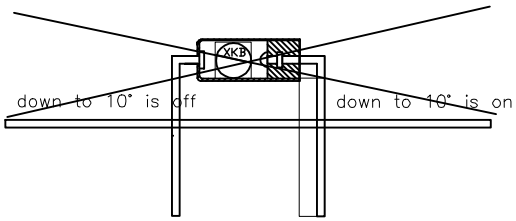

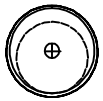

XKB Product features
XKB
1. SW-200m is a single ball type unidirectional tilt inductive trigger switch.
1 SW-200m
2. When the guide end (no pin end) of the product is tilted and the tilt angle is greater than 10 degrees, the product is in the open circuit, (off) state. When the horizontal state of the product is tilted, the trigger end (gold-plated pin end) is lower than the horizontal and the tilt angle is greater than 10 degrees, the product is in the closed circuit, (on) state.
2. 10

10
3. When it is placed horizontally, shaking is easy to trigger, but when there is no foot down, shaking is not easy to trigger.
3.
4. The product of this specification is completely sealed, waterproof and dustproof.
4.
5. Under normal conditions, the service life of the switch can reach 100000 times.
5. 10
6. This product is made of environmental protection metal material. XKB
6

Voltage: < 12V
Current: < 20mA
Conduction time: 2ms
Closed circuit resistance: < 10m ohm
Open circuit resistance: > 10m ohm
High temperature resistance: 120 degrees
Terminal tension: 500gf / min
Humidity: 25~95%RH
Operating life: 100,000 times

ITEM	PAPT NAMF	QTY	MATERIAL	FINISHING
	Heat shrinkable tube	1	PET	
	Rubber stopper	1	LCP	
	Roll Ball	1	Brass	Silver
	Guide pin A	1	Brass	Gold-plated
	Guide pin B	1	Brass	TIN
	Copper tube	1	Brass	Nickel

AuGLAR	±5°
X.	±0.40
X.x	±0.30
X.xx	±0.20
X.xxx	±0.15
UNSPECIFIED TOLERAuCES	

XKB Connection

DESIGN		VIEW:	MODEL TYPE: Ball switch
CHECKED		UNIT: mm/in	PART NO.: SW-200M-10T10G
APPROVED		SIZE: A4	DWG NO.:

XKB INDUSTRIAL PRECISION CO.,LIMITED

SCALE	PAGE	REVISION
N/A	1/1	A1