REVISIONS					
REV.	ECN NO.	LOCATION	DESCRIPTION	DATE	DESIGN
A0	N/A		INITIAL RELEASE	/	/
A1	N/A		图面升级整理图面	2024.12.28	阿树

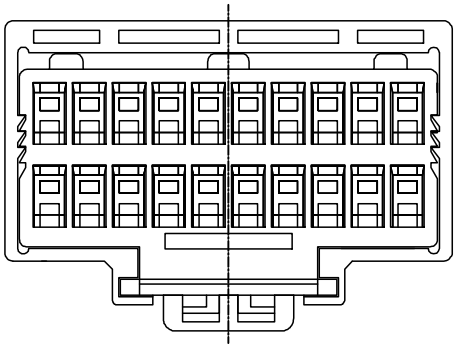

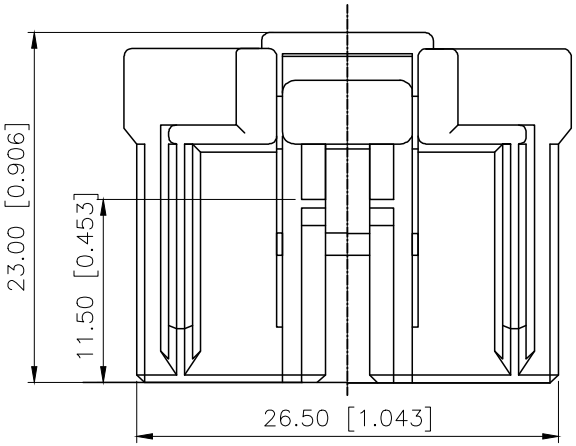

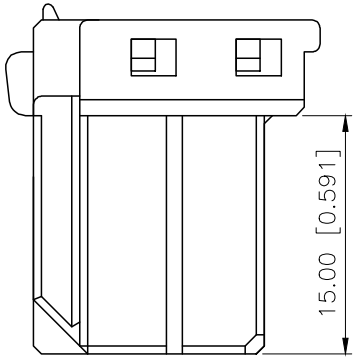

Current rating:3A AC/DC
额定电流：3A AC/DC
Temperature range:−40℃−+125℃
温度范围：−40℃−+125℃

PART NO.:

K 175977 H−2x10−N0
① ② ③ ④ ⑤

①K:XKBTEK−Car Connector
②XKB Series No
③Category:H−Housing
④Row No.Pin No:2x10 Pin
⑤Material:N0−PA66 UL94V−0

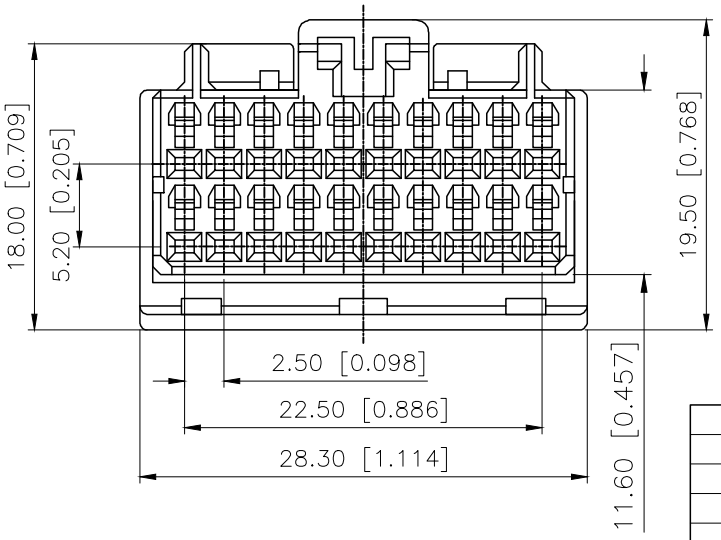

K175977H−2xXX−N0	PA66	K175977W	K175977T
PART NO	Material	Suitable XKB Wafer	Suitable XKB Terminal

AuGLAR	±5°
X.	±0.40
X.x	±0.30
X.xx	±0.20
X.xxx	±0.15
UNSPECIFIED TOLERAuCES	

XKB Connection

XKB INDUSTRIAL PRECISION CO.,LIMITED

DESIGN	阿树	VIEW:	MODEL TYPE: 2.5mm Automobile connector
CHECKED		UNIT: mm/in	PART NO.: K175977H−2x10−N0
APPROVED		SIZE: A4	DWG NO.:

SCALE	PAGE	REVISION
N/A	1/1	A1