REVISIONS					
REV.	ECN NO.	LOCATION	DESCRIPTION	DATE	DESIGN
A0	N/A		INITIAL RELEASE	/	/
A1	N/A		图面升级整理图面	2025.06.26	阿树

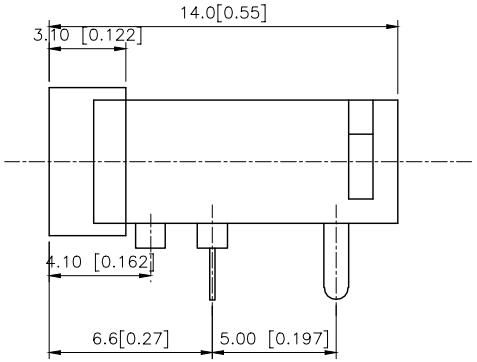

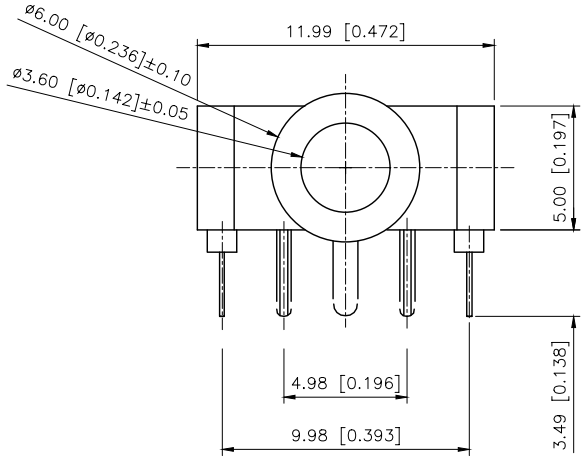

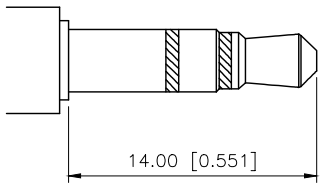

ø3.50 MATE PLUG

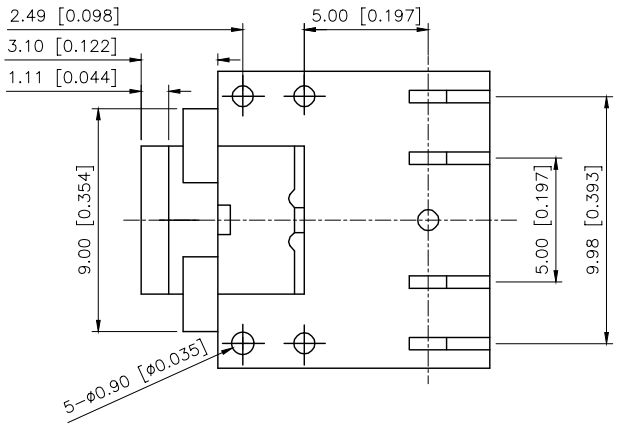

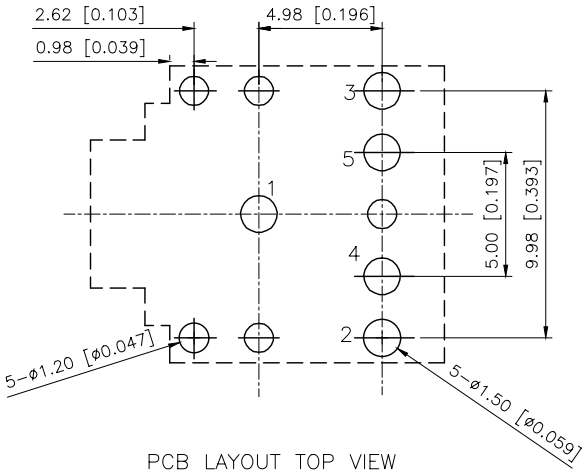

PCB LAYOUT TOP VIEW

PIN	PJ-307N3	PJ-307N4	PJ-307N5
Schematic	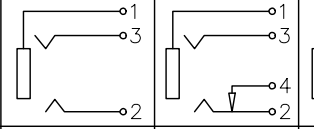		
PIN			
1	sleeve	sleeve	sleeve
2	tip	tip	tip
3	ring	ring	ring
4	NP	tip switch	tip switch
5	NP	NP	ring switch

Plastic	PBT	
Terminal 5	Brass	tin
Terminal 4	Brass	tin
Terminal 3	Phosphor Bronze	tin
Terminal 2	Phosphor Bronze	tin
Terminal 1	Phosphor Bronze	tin
PAPT NAMF	MATERIAL	PLATING

AuGLAR	±5°
X.	±0.40
X.x	±0.30
X.xx	±0.20
X.xxx	±0.15
UNSPECIFIED TOLERAuCES	

XKB Connection 星坤

DESIGN	阿树	VIEW:	MODEL TYPE: 3.5 PHONE JACK
CHECKED		UNIT: mm/in	PART NO.: PJ-307N5
APPROVED		SIZE: A4	DWG NO.: X-PJ-307N5

XKB INDUSTRIAL PRECISION CO.,LIMITED

SCALE	PAGE	REVISION
N/A	1/1	A1

www.helloxkb.com www.helloxkb.cn www.xk-dg.cn