GC Series

HIW

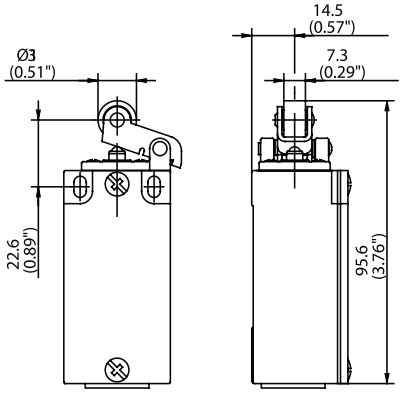

DR

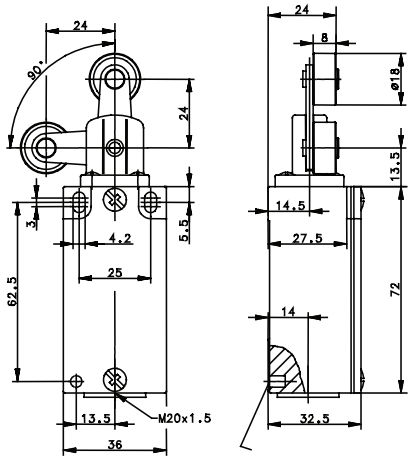

Switching Operation	HIW Slow Action	HIW Snap Action	DR Slow Action	DR Snap Action
1 NC / 1 NO Contacts	**602.1120.057** GC-U1Z HIW 11 12 / 23 24	**602.1370.629** GC-SU1Z HIW 11 12 / 23 24	– -	**602.1191.099** GC-SU1Z DR 11 12 / 23 24
2 NC Contacts	**602.1820.175** GC-A2Z HIW 11 12 / 21 22	– -	– -	– -
2 NO Contacts	**602.1820.157** GC-E2 HIW 13 14 / 23 24	– -	– -	– -
1 NC / 1 NO Contacts Overlapping	**602.1320.058** GC-UV1Z HIW 15 16 / 23 24	– -	– -	– -
Replacement actuator:	**391.2200.552**		**391.2410.593**	

Technical Information	HIW Slow Action	HIW Snap Action	DR Slow Action	DR Snap Action
Maximum Switching Voltage	240V	240V	240V	240V
Max. Switching Amps (up to)*	10A	10A	10A	10A
B10d (up to)*	20 Million	20 Million	20 Million	20 Million
Mechanical Service Life (up to)*	3×10^6	10×10^6	10×10^6	10×10^6
Switching Frequency	≤ 100/min	≤ 100/min	≤ 100/min	≤ 100/min
Operating Temperature	–30 °C to +80 °C	–30 °C to +80 °C	–30 °C to +80 °C	–30 °C to +80 °C
Protection Rating	IP65	IP65	IP65	IP65
Utilization Category (up to)*	AC-15, Ue/Ue 240V 3A	AC-15, Ue/Ue 240V 3A	AC-15, Ue/Ue 240V 3A	AC-15, Ue/Ue 240V 3A
Rate Insulation Voltage	400VAC	400VAC	400VAC	400VAC
Approvals	* Depending on switching system - see technical information for details			

Special features/variants (on request)

- Available with different actuator directions, steel roller and additional contacts:
  2 NC /1 NO overlaping contact (larger enclosure)
  2 NC /2 NO contact (larger enclosure)

Drawing dimensions in mm

Mouser Electronics

Authorized Distributor

Click to View Pricing, Inventory, Delivery & Lifecycle Information:

Altech:

602.1191.099 602.1370.629 602.1820.157