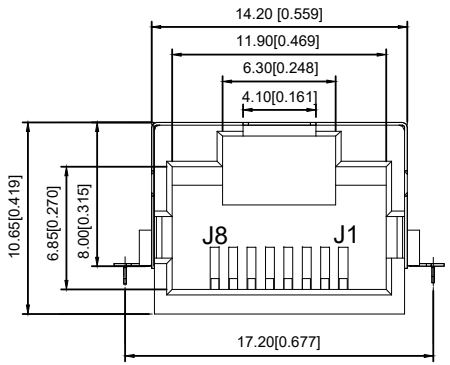

FRONT VIEW

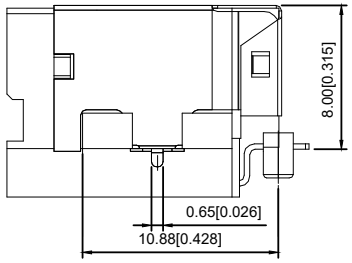

RIGHT SIDE VIEW

XKB Connecitity

MATERIAL 材料:
- HOUSING 外壳: LCP,UL94V-0,BLACK.
- TERMINAL 端子: PHOSPHOR BRONZE T=0.3MM, GOLD PLATING
- SHIELD 保护物: C2680,T=0.20MM

ELECTRICAL电气:
- VOLTAGE 电压: 150 VOLTS AC.
- CURRENT RATING 电流额定值: 1.5AMP.
- DIELECTRIC STRENGTH 介电强度: 1000 VAC RMS 50HZ OR 60HZ,1 MIN
- INSULATION RESISTANCE 绝缘电阻: 500 MEGA OHMS MIN.
- CONTACT RESISTANCE 接触电阻: 40 MILLIOHMS MAX.
- OPERATING TEMPERATURE 工作温度: -40°C~+80°C.
- ALL CRITICAL DIMENSIONS WITH "*"

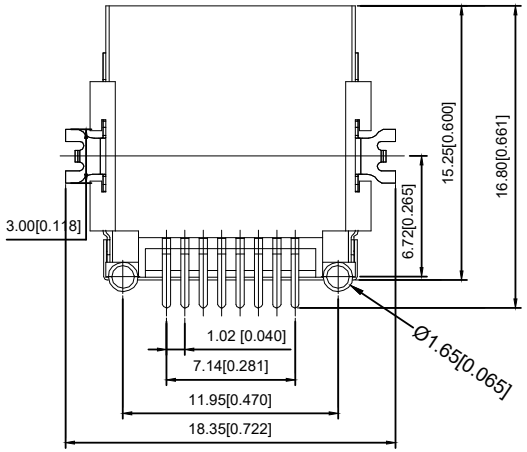

BOTTOM VIEW

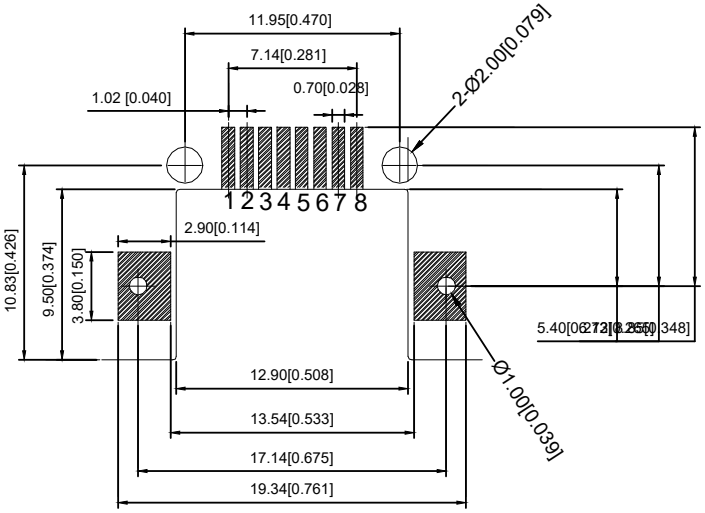

RECOMMENDED PCB LAYOUT
VIEWED FROM COMPONENT SIDE

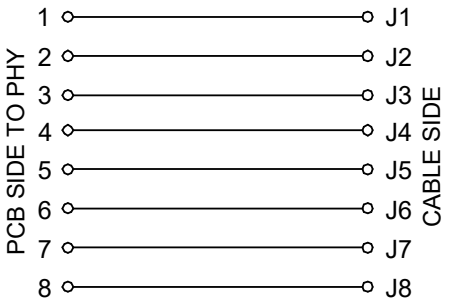

MARK	DESCRIPTION	DATE	REVISED	APPROVED
ΔX				
ΔX				
ΔX				

REVISIONS

UNSPECIFIED TOLERANCES	
ANGLAR	±5°
L≤ 4	±0.2
4<L≤ 16	±0.3
16<L≤ 63	±0.4
L> 63	±0.5

XKB INDUSTRIAL PRECISION CO.,LIMITED

DSND		SCALE: N/A	MODEL TYPE: RJ JACK
DWN		VIEW:	PART NO.: X48ADGWA6SB1133
CHKD		UNIT: mm/in	DWG NO.: X-X48ADGWA6SB1133
APPD		SIZE: A4	WEIGHT / SHEET 1/1 / REVISION A0