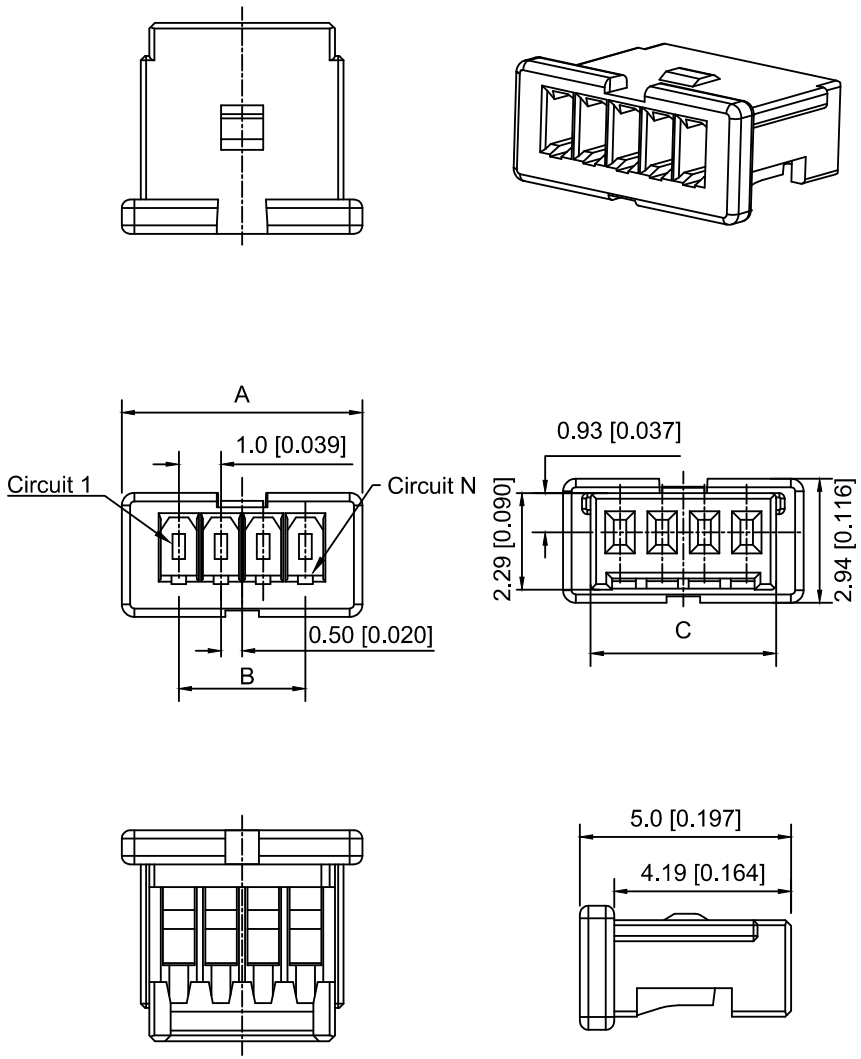

X1004H-XXA-N0HF
02-05Pin

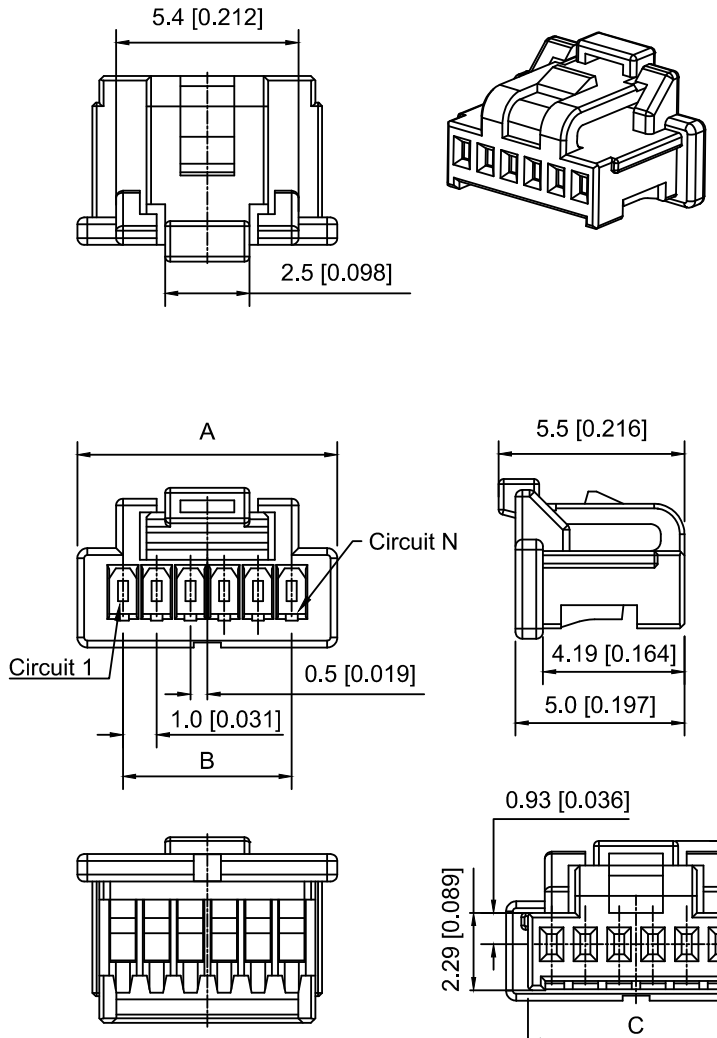

X1004H-XXA-N0HF
06-15Pin

Specifications:
规格：
Voltage rating:100V AC/DC
额定电压：100V AC/DC
Current rating:1A AC/DC
额定电流：1A AC/DC
Withstanding voltage:300V AC/minute
耐受电压：300V AC/分钟
Temperature range:-40℃-+105℃
温度范围：-40℃-+105℃
Insulation resistance:≥100MΩ
绝缘电阻：≥100MΩ
Contact resistance:≤20mΩ
接触电阻：≤20mΩ

X1004 H - 12 A - N0 HF
① ② ③ ④ ⑤ ⑥

1.Series No
2.Category:H-Housing
3.Row No.Pin No:XX-02-15 Pin
4.Special No:A-Inner Lock
5.Material:N0-PA66 UL94V-0
6.HF-Halogen Free

Poles	Dimensions(mm)		
	A	B	C
02	3.70	1.00	2.40
03	4.70	2.00	3.40
04	5.70	3.00	4.40
05	6.70	4.00	5.40
06	7.70	5.00	6.40
07	8.70	6.00	7.40
08	9.70	7.00	8.40
09	10.70	8.00	9.40
10	11.70	9.00	10.40
11	12.70	10.00	11.40
12	13.70	11.00	12.40
13	14.70	12.00	13.40
14	15.70	13.00	14.40
15	16.70	14.00	15.40

X1004H-12A-N0HF	PA66	X1004W-A	X1004T
PART N0	Material	Suitable XKB Wafer	Suitable XKB Terminal

MARK	DESCRIPTION	DATE	REVISED	APPROVED
ΔX				
ΔX				
ΔX				

REVISIONS

ANGLAR	±5°
L≤ 4	±0.2
4<L≤ 16	±0.3
16<L≤ 63	±0.4
L> 63	±0.5

UNSPECIFIED TOLERANCES

www.helloxkb.com www.helloxkb.cn www.xk-dg.cn

XKB

DSND		SCALE: N/A	MODEL TYPE: 1.0mm Crimp Style Connector
DWN		VIEW:	PART NO.: X1004H-12A-N0HF
CHKD		UNIT: mm/in	DWG NO.: X-X1004H-12A-N0HF
APPD		SIZE: A4	

XKB INDUSTRIAL PRECISION CO.,LIMITED

WEIGHT	SHEET	REVISION
	1/1	A0