REVISIONS					
REV.	ECN NO.	LOCATION	DESCRIPTION	DATE	DESIGN
A0	N/A		INITIAL RELEASE	/	/
A1	N/A		图面升级整理图面	2025.06.06	阿树

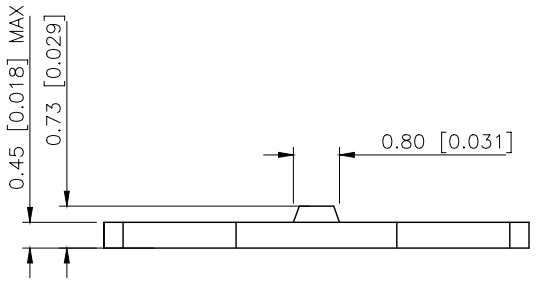

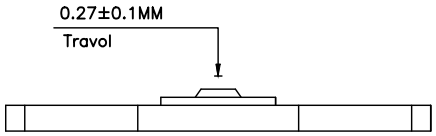

SPECIFICATION
产品规格
Contact Rating: 50mA,12V DC
触点额定值:
Contact Resistance : 100MΩ max
接触电阻
Insulation Resistance:100MΩ.500V DC
绝缘电阻
Dielectric Strength:250V AC/1minute
介电强度

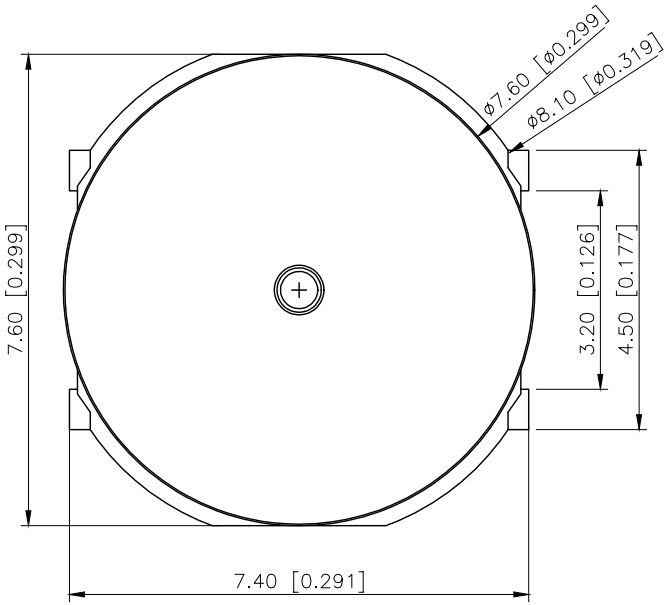

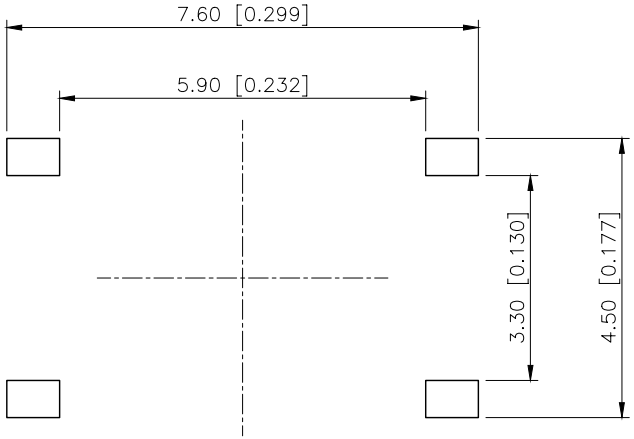

P.C.B LAYOUT

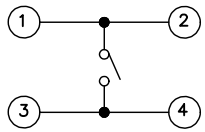

CIRCUIT DIAGRAM

0.73mm	WHITE	BALK	250±50gf	100,000 Cycles
"H"	STEM COLOR	BASE COLOR	O/FORCE	LIFE

AuGLAR	±5°
X.	±0.40
X.x	±0.30
X.xx	±0.20
X.xxx	±0.15
UNSPECIFIED TOLERAuCES	

XKB Connection 星坤

DESIGN	阿树	VIEW:	MODEL TYPE: TACT SWITCH
CHECKED		UNIT: mm/in	PART NO.: TS-7476-C
APPROVED		SIZE: A4	DWG NO.: TS-7476-C

XKB INDUSTRIAL PRECISION CO.,LIMITED

SCALE	PAGE	REVISION
N/A	1/1	A1

www.helloxkb.com www.helloxkb.cn www.xk-dg.cn