REVISIONS					
REV.	ECN NO.	LOCATION	DESCRIPTION	DATE	DESIGN
A0	N/A		INITIAL RELEASE	/	/
A1	N/A		图面升级整理图面	2025.08.09	阿树

P/N	R/C
U261-24XXN-4B0281	C(10nF/30V MIN)
U261-24XXN-4B0165	C(10nF/30V MIN)+RD(5.1KΩ)
U261-24XXN-4B0174	C(10nF/30V MIN)+RP(56KΩ)

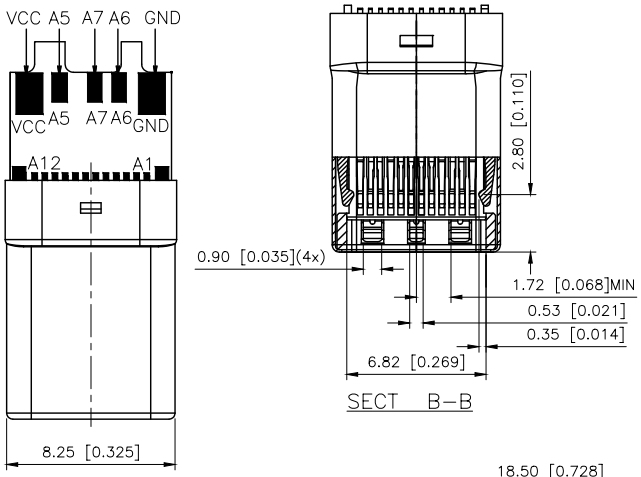

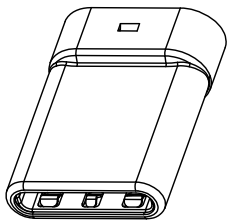

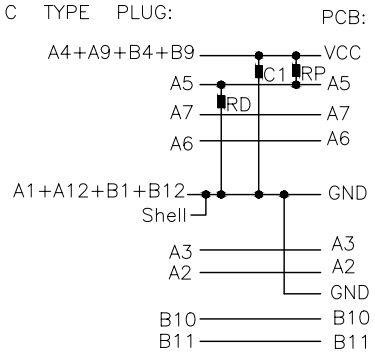

REMARKS:
1.CONTACT INSERTION AND WITHDRAW FORCE:
1.Insertion force: 5N-20N max.
2. Withdrawal force: 8N-20N.
3.Durability : 10000Cycles.
2.ELECTRIC PROPERTY:
1.Contact current rating: 3A.
2.Dielectric Strength: 100V AC(RMS).
3.Insulation Resistance: 100 megaohms min.
4.Contact resistance:
40mOhms MAX.FOR VBUS,GND AND OTHER CONTACT
50mOhms MAX.AFTER ENVIRONMENT TEST
3.AMBIENT TEMPERATURE:
1.Operating temperature: -55°C to +85°C.

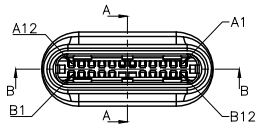

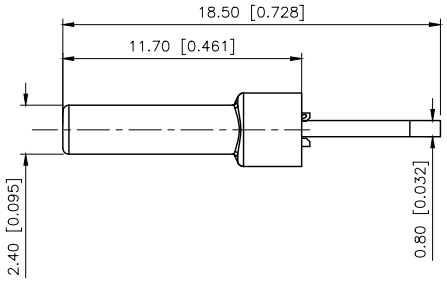

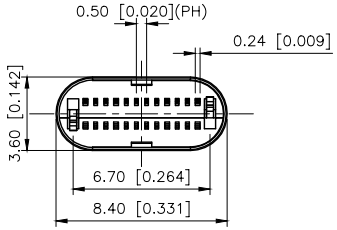

U261-2422N-4B0174
2: Ni
2:Au3u"
B:BLACK
4:LCP

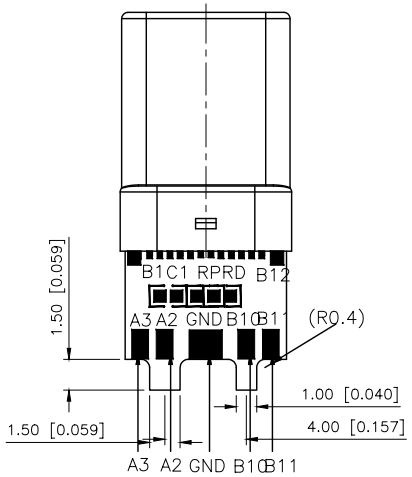

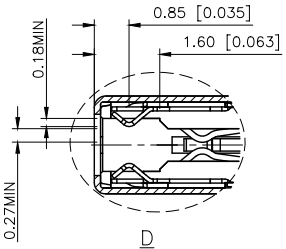

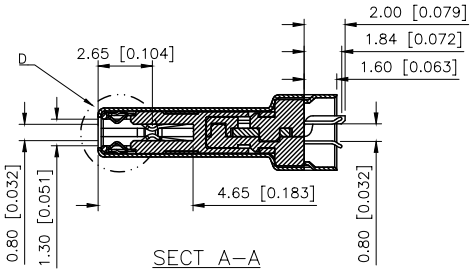

ITEM	DESCRIPTION	MATERIAL	REMARKS
6	Shrapnel	SUS T=0.10mm	
5	Shell	SUS T=0.15mm	Ovep-plating: Ni
4	Terminal	C7025 T=0.15mm	Ovep-plating:Au Ni/Sn
3	Latch	SUS T=0.4mm	
2	Housing	LCP	UL94-0
1	Housing Stopper	LCP	UL94-0

A12	A11	A10	A9	A8	A7	A6	A5	A4	A3	A2	A1
GND	RX2+	RX2-	Vbus	SBU1	D-	D+	CC	Vbus	TX1-	TX1+	GND
GND	TX2+	TX2-	Vbus	Vconn			SBU2	Vbus	RX1-	RX1+	GND
B1	B2	B3	B4	B5	B6	B7	B8	B9	B10	B11	B12

AuGLAR	±5°
X.	±0.40
X.x	±0.30
X.xx	±0.20
X.xxx	±0.15
UNSPECIFIED TOLERAuCES	

XKB Connection 星科

DESIGN	阿树	VIEW:	MODEL TYPE: Type-C 3.1
CHECKED		UNIT: mm/in	PART NO.: U261-2422N-4B0174
APPROVED		SIZE: A4	DWG NO.: X-U261-2422N-4B0174

XKB INDUSTRIAL PRECISION CO.,LIMITED

SCALE	PAGE	REVISION
N/A	1/1	A1