1 Features

- Meets IEEE 802.3 and ANSIX3.263 standards .RoHS Compliant
- Less magnetic components to be placed on PCB,higher reliability and yields
- Minimize PCB space and Simplify PCB Layout
- Cable interface for isolation and low common mode emissions.
- Storage temperature range: -40℃ to +85℃
- Operating temperature range: 0℃ to +70℃

2 Specifications

Part No	OCL(uH min) @100KHz/0.1Vrms 8MA BIA	Turns Ratio(3%)		DCR (Ω) Max	Cww(Pri:Sec) pF Typ		Isolation Voltage(AC Vrms 3S)
H1159S01B-GYB	350UH	1:1		/	/		1500V
Part No	Insertion loss(dB max) 1-100MHz	Return Loss(dB Min) MHz			CMRR(dB min)MHz		Cross Talk (dB Min)
		1-10	10~30	30~60	1-30	30~60	1~100
H1159S01B-GYB	-1.0	-20	-16	-12	-40	-35	-30

3 Mechanical

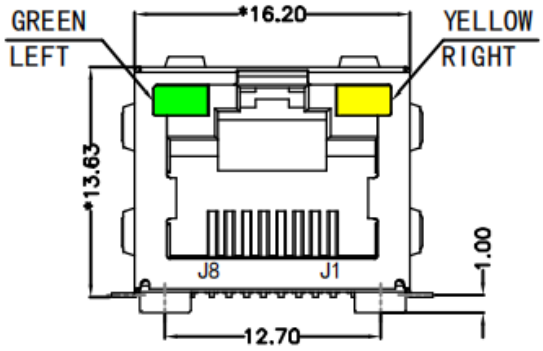

FRONT VIEW

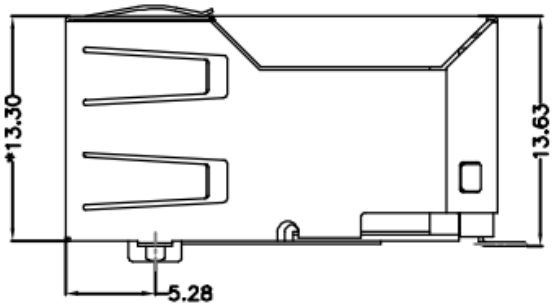

RIGHT SIDE VIEW

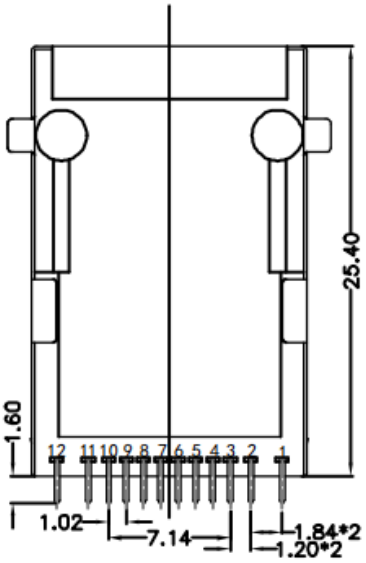

BOTTOM VIEW

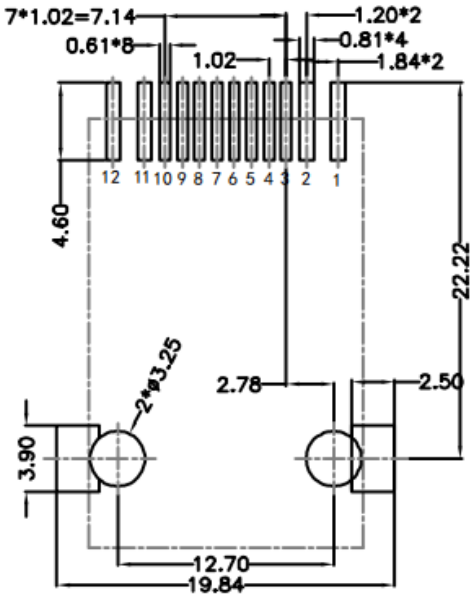

RECOMMENDED PCB LAYOUT
VIEWED FROM COMPONENT SIDE

※unit： mm

石门盈盛电子科技有限公司 http://www.hqs-t.com/ TEL：0755-21083343 18673625585
Shimen Yingsheng Electronic Technology Co., Ltd https://hqst01.taobao.com E-mail: hqst008@163.com

4 Schematic

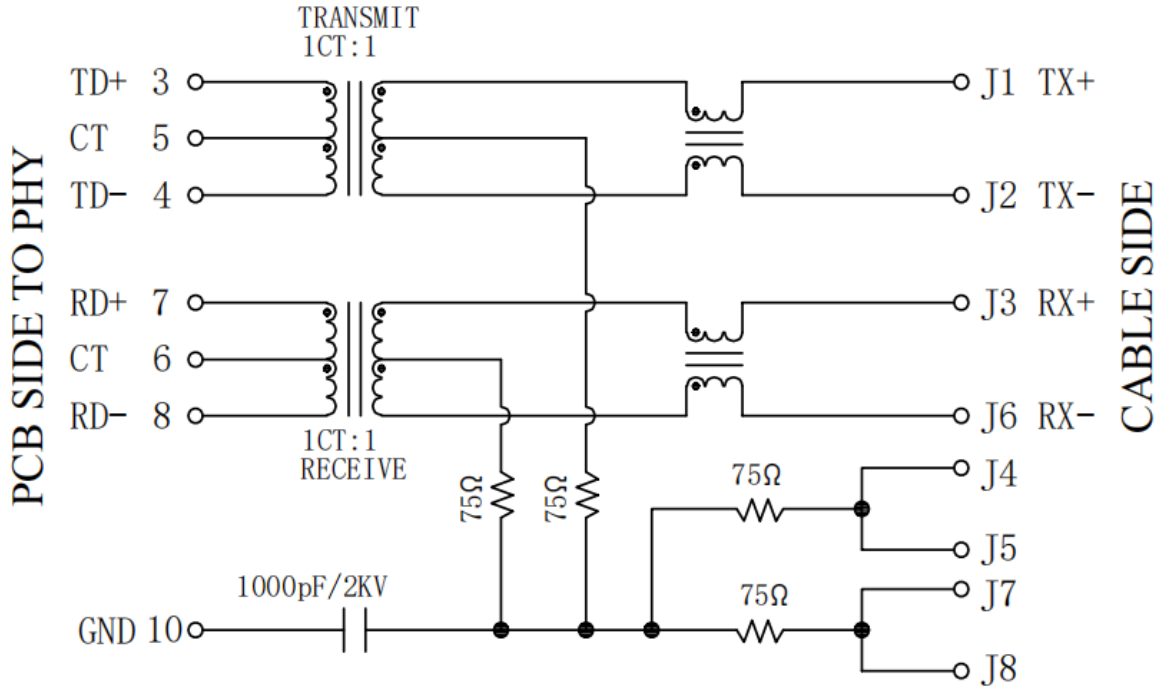

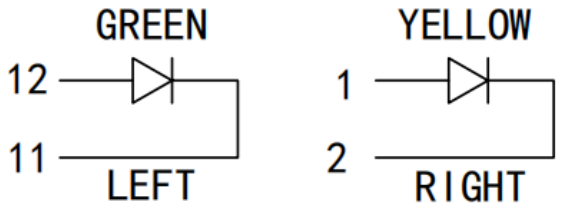

1.Connector Material:
Houising:Thermoplastic UL94 V-0
Contact/Shield:Cooper alloy
Shield Plating:Nickel
Contact Plating:Selective gold 6u″
2.Tolerances comply with F.C.C dimension requirements
3.Durability:800 mating Min

LED Specification

Standard LED Color	LED Wavelength	Foward(A)	Foward(V)
Green	568nm	20mA	1.85-2.45V
Yellow	585nm	20mA	1.7-2.2V

石门盈盛电子科技有限公司 http://www.hqs-t.com/ TEL：0755-21083343 18673625585
Shimen Yingsheng Electronic Technology Co., Ltd https://hqst01.taobao.com E-mail: hqst008@163.com