REVISIONS					
REV.	ECN NO.	LOCATION	DESCRIPTION	DATE	DESIGN
A0	N/A		INITIAL RELEASE	/	/
A1	N/A		图面升级整理图面	2025.06.24	阿树

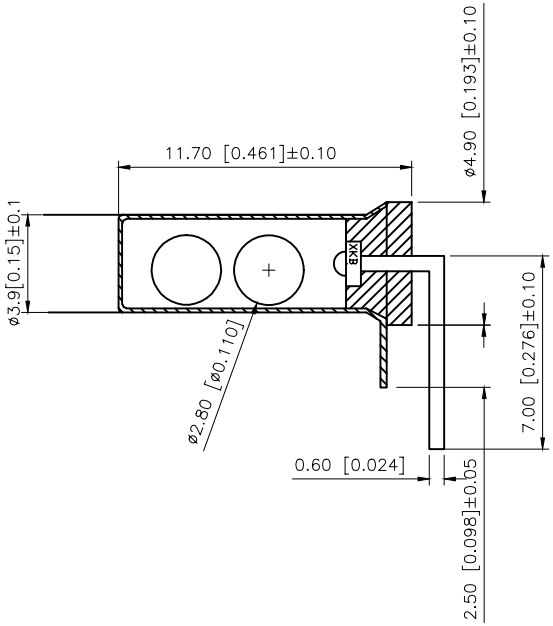

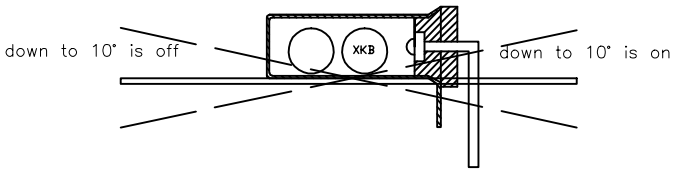

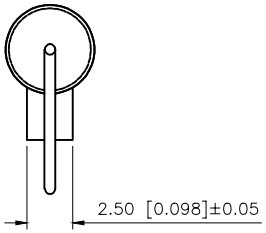

XKB Product features
XKB产品特性
1.SW-168 is double ball type single direction tilt induction trigger switch。
1.SW-168为双球型单向倾斜感应触发开关。
2. When the electric end of the product guide (foot less) is tilted and the tilt Angle is greater than 10 degrees, the product is in the open, (OFF) state. When the horizontal state of the product is tilted and the trigger end (gold-plated pin end) is lower than the horizontal and the tilt Angle is greater than 10 degrees, the product is in the closed, (ON) state.
2.当产品导轨（无脚）的电气端倾斜且倾斜角度大于10度时，产品处于打开（关闭）状态。当产品水平状态倾斜，触发端（镀金销端）低于水平且倾斜角度大于10度时，产品处于闭合（开）状态。
3. When placed horizontally, shaking can be easily triggered, and when there is no foot down, shaking is not easy to trigger.
3.水平放置时，很容易触发震动，没有脚下来时，不容易触发震动。
4. The products of this specification are completely sealed, waterproof and dustproof.
4.本规范产品全密封、防水、防尘。
5. Under normal circumstances, the switching life can reach 100,000 times.
5.正常情况下，开关寿命可达10万次。
6. This product is made of environment-friendly metal material with stable performance.
XKB
6、本产品采用环保型金属材料，性能稳定。

Voltage: < 12V
Current: < 20mA
Conduction time: 2ms
Closed circuit resistance: < 10m ohm
Open circuit resistance: > 10m ohm
High temperature resistance: 120 degrees
Terminal tension: 500gf / min
Humidity: 25~95%RH
Operating life: 100000 times

ITEM	PAPT NAMF	QTY	MATERIAL	FINISHING
⑦	Heat shrinkable tube	1	Pet heat shrinkable tube	
⑥	Rubber stopper	1	PLC	
⑤	Ball	1	Phosphor copper	Nicke
④	Ball	1	SUS	Silver
③	PIN A	1	Brass	Nicke
②	PIN B	1	Brass	Gold
①	steel tube	1	Brass	Nicke

AuGLAR	±5°
X.	±0.40
X.x	±0.30
X.xx	±0.20
X.xxx	±0.15
UNSPECIFIED TOLERAuCES	

XKB 星创 Connection

DESIGN	阿树	VIEW:	MODEL TYPE: Ball switch
CHECKED		UNIT: mm/in	PART NO.: SW-168DW-7G
APPROVED		SIZE: A4	DWG NO.: X-SW-168DW-7G

XKB INDUSTRIAL PRECISION CO.,LIMITED

SCALE	PAGE	REVISION
N/A	1/1	A1

www.helloxkb.com www.helloxkb.cn www.xk-dg.cn