REVISIONS					
REV.	ECN NO.	LOCATION	DESCRIPTION	DATE	DESIGN
A0	N/A		INITIAL RELEASE	/	/
A1	N/A		图面升级整理图面	2025.07.01	阿树

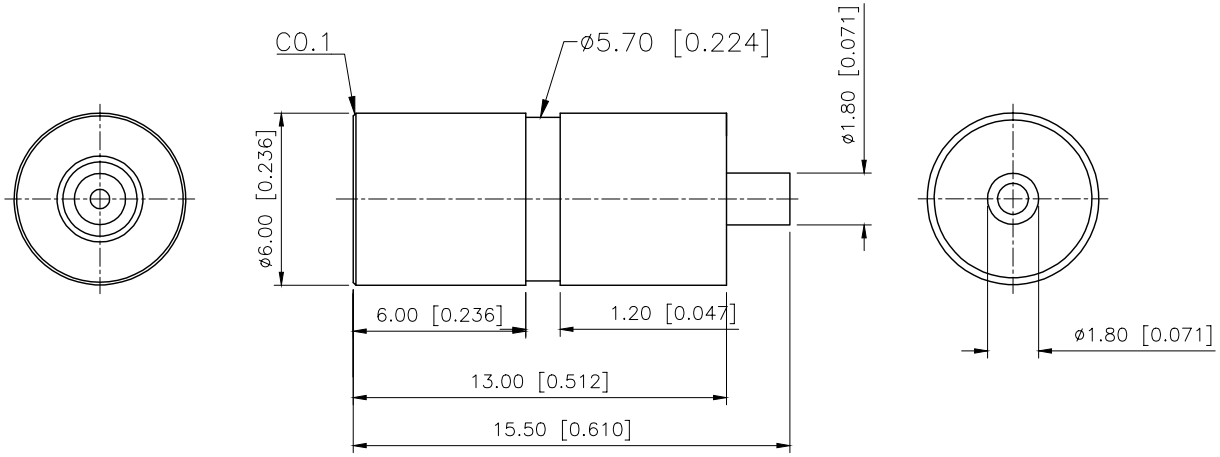

Technolo Request:
1.Outlook:
NO burr,no hurt.
2.Electronic performance:
a:Insulation resistance:
Above DC500V/100MΩ;
b:Endure voltage:
AC500V at 1 minute;
c:Contact resistance:
Under 30MΩ;
3.Insertion fore & withdrawal force;0.3–3kgf.
4.Salt spray test :24H.

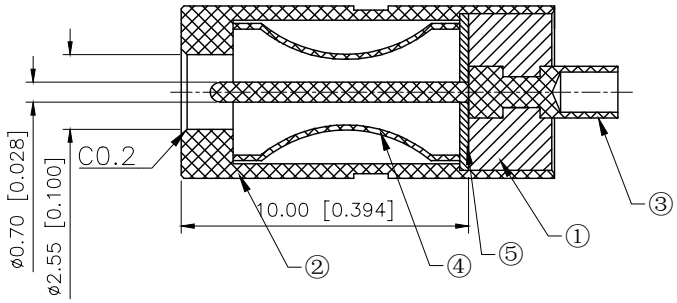

silicone pad		
Spring	Phosphor Bronze	Ni
Waterproof tube	C3604	Ni
terminal	Brass	Ni
Plastic	PBT	Black
PAPT NAMF	MATERIAL	PLATING

AuGLAR	±5°
X.	±0.40
X.x	±0.30
X.xx	±0.20
X.xxx	±0.15
UNSPECIFIED TOLERAuCES	

XKB Connection

DESIGN	阿树	VIEW:	MODEL TYPE: DC POWER JACK
CHECKED		UNIT: mm/in	PART NO.: DC–F0760
APPROVED		SIZE: A4	DWG NO.: DC–F0760

XKB INDUSTRIAL PRECISION CO.,LIMITED

SCALE	PAGE	REVISION
N/A	1/1	A1

www.helloxkb.com www.helloxkb.cn www.xk–dg.cn