1 Features

- Meets IEEE 802.3 bt and ANSIX3.263 standards .RoHS Compliant
- Less magnetic components to be placed on PCB,higher reliability and yields
- Minimize PCB space and Simplify PCB Layout
- Cable interface for isolation and low common mode emissions.
- WorkingCurrentForPoE:720mADC MAX
- Storage temperature range: -40℃ to +85℃
- Operating temperature range:0℃ to +70℃

2 Specifications

Part No	OCL(uH min) @100KHz/0.1Vrms 8MA BIA	Turns Ratio(3%)		DCR (Ω) Ma	CWW(MAX@ 100KHz 10.2V		Isolation Voltage(AC Vrms 3S)
N1159A04AP-00B	150UH	1:1		1.2	35PF		1500V
Part No	Insertion loss(d max) 1-400MHz	Return Loss(dB Min) MHz			CMRR(dB min)MHz		Crosstalk (dB min)MHz
		1-200	200-300	300-500	1-300	300~800	1~500
N1159A04AP-00B	-2.0	-17	-14	-12	-21	-20	-25

3 Mechanical

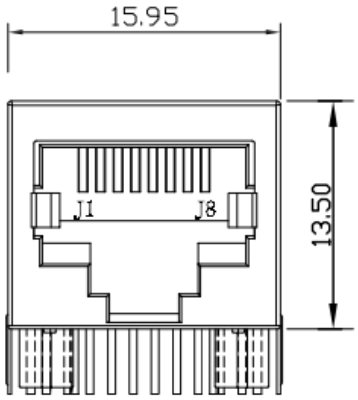

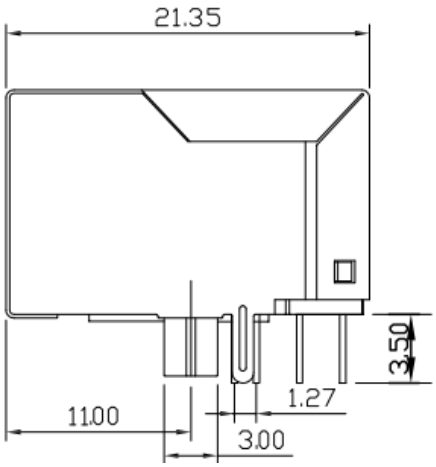

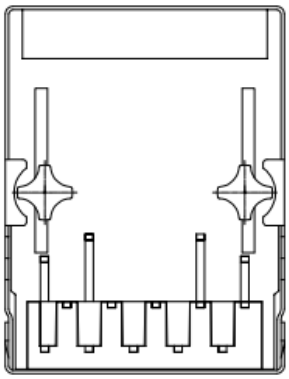

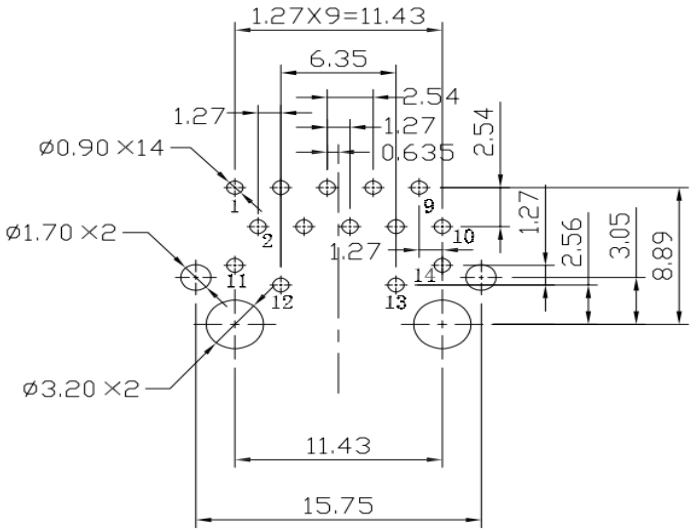

P.C.B RECOMMENDED HOLE LAYOUT SEEN FROM COMPONENT SIDE

ALL CENTERLINE DIMENSIONS ARE BASIC

※unit： mm

石门盈盛电子科技有限公司 http://www.hqs-t.com/ TEL：0755-21083343 18673625585
Shimen Yingsheng Electronic Technology Co., Ltd https://hqst01.taobao.com E-mail: hqst008@163.com

4 Schematic

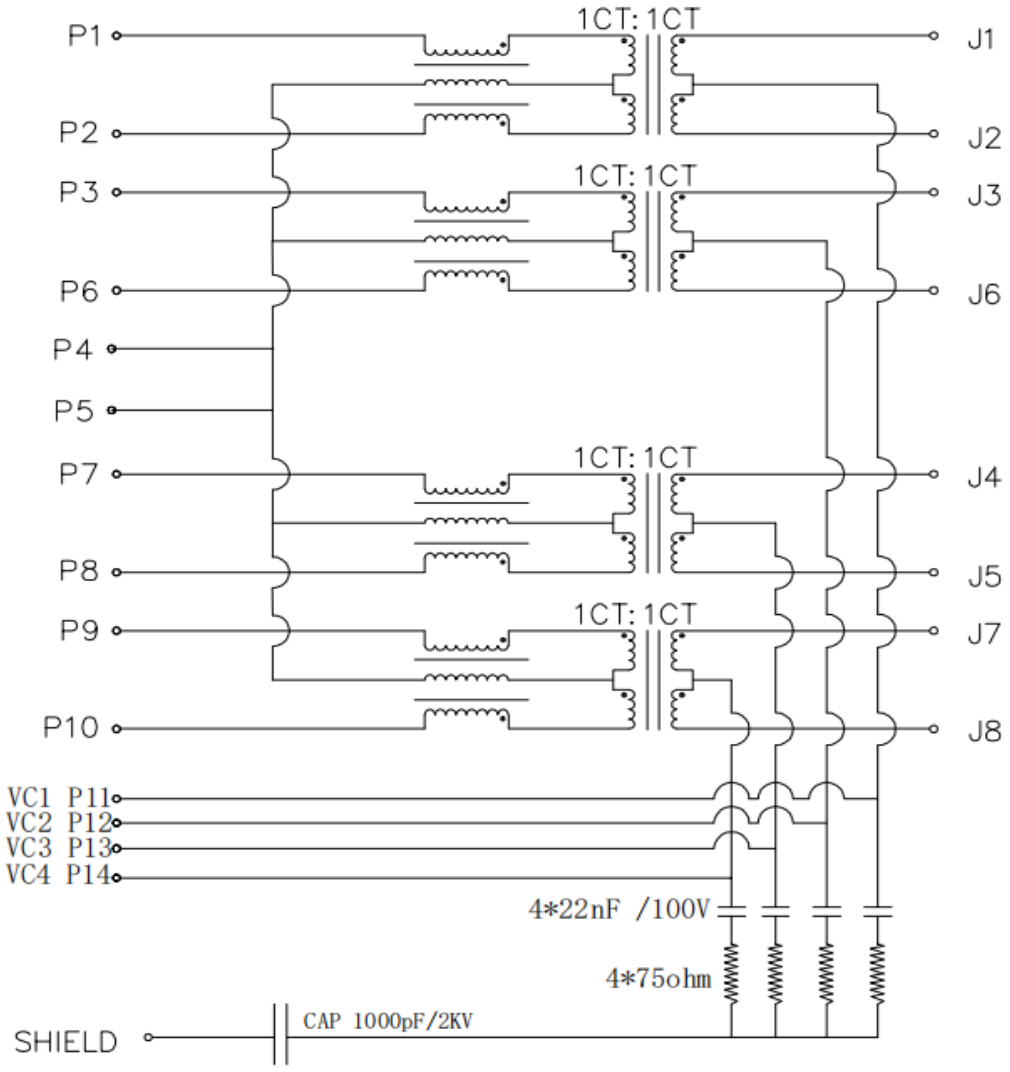

1.Connector Material:
Houising:Thermoplastic UL94 V-0 Contact/Shield:Cooper alloy
Shield Plating:Nickel
Contact Plating:Selective gold 6u″ Min
2.Tolerances comply with F.C.C dimension requirements
3.Durability:800 mating Min

石门盈盛电子科技有限公司 http://www.hqs-t.com/ TEL：0755-21083343 18673625585
Shimen Yingsheng Electronic Technology Co., Ltd https://hqst01.taobao.com E-mail: hqst008@163.com