REACH & RoHS COMPLIANT

REV.	ECN / DESCRIPTION	BY	DATE

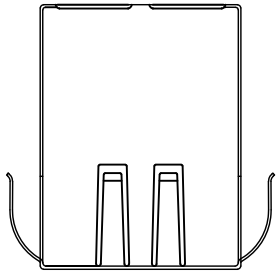

TOP VIEW

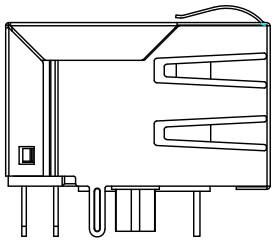

LEFT SIDE VIEW

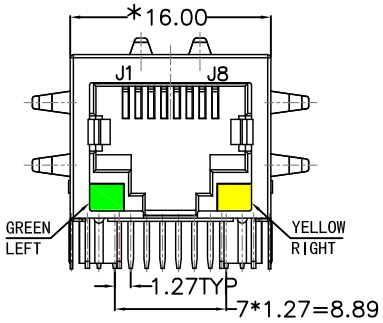

FRONT VIEW

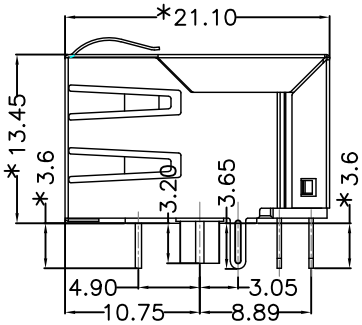

RIGHT SIDE VIEW

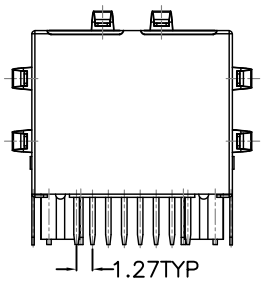

BACK VIEW

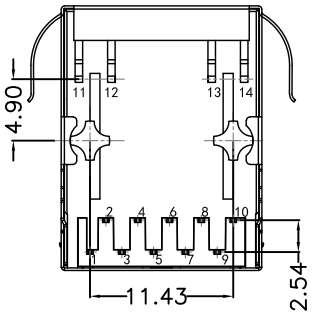

BOTTOM VIEW

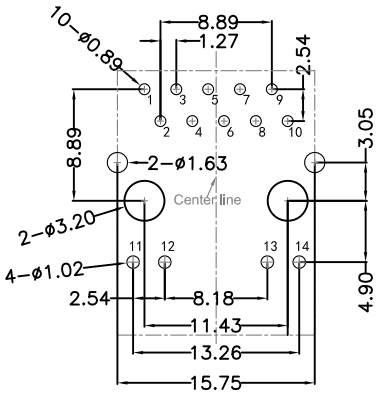

RECOMMENDED PCB LAYOUT
VIEWED FROM COMPONENT SIDE

MATERIAL:

HOUSING : PBT,UL94V-0,BLACK.
TERMINALS BRACKET: PBT,UL94V-0,BLACK.
SHIELD: C2680,T=0.20MM,NICKEL PLATING ON ALL AREA.
TERMINAL: PHOSPHOR BRONZE C5210,T=0.35MM,
6U" GOLD PLATING ON CONTACT AREA.

MECHANICAL:

DURABILITY : 750 CYCLES MIN.
MATING FORCE : 23N MAX.
OPERATING TEMPERATURE: -40°C~+85°C.
STORAGE TEMPERATURE: -40°C~+85°C.
ALL CRITICAL DIMENSIONS WITH "*"

深圳市富港科技有限公司

TITLE:	SIZE	UNITS	GENERAL TOLERANCES UNLESS SPECIFIED		APPROVED BY:
TAB-DOWN 1X1 1000BASE	A4	MM[INCH]			KYD
PART NO.:	SACLE	REV	x±0.35	x°±3.0°	CHECKED BY:
RJ-111Q066EA2A1DMZ	1:1	A0	.x±0.30	.x°±2.0°	
REMARK:	SHEET		.xx±0.25	.xx°±1.5°	DESIGND BY:
	1/4		.xxx±0.10	.xxx°±1.0°	

REV.	ECN / DESCRIPTION	BY	DATE

REACH & RoHS COMPLIANT

RECOMMENDED PANEL CUTOUT(REFFERENCE ONLY):

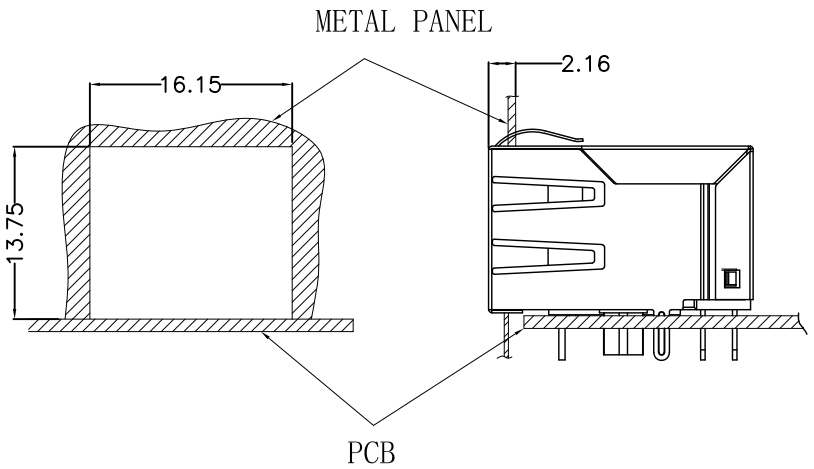

UNIT: MM / INCH
TOLERANCES: ±0.10 / 0.004
REFERENCE ONLY

KEEP-OUT AREA(COMPONENT SIDE VIEW):

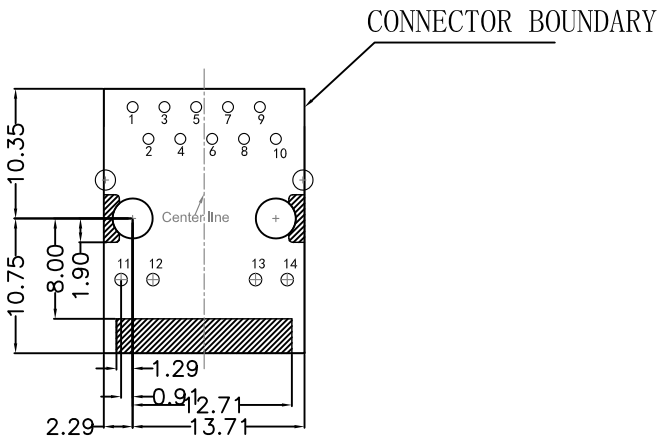

PLUG-IN SIDE

UNIT: MM / INCH
TOLERANCES: ±0.10 / 0.004

深圳市富港科技有限公司

TITLE: TAB-DOWN 1X1 1000BASE	SIZE A4	UNITS MM[INCH]	GENERAL TOLERANCES UNLESS SPECIFIED		APPROVED BY:
PART NO.: RJ-111Q066EA2A1DMZ	SACLE 1:1	REV A0	x±0.35	x°±3.0°	CHECKED BY:
			.x±0.30	.x°±2.0°	
REMARK:	SHEET 2/4		.xx±0.25	.xx°±1.5°	DESIGND BY:
			.xxx±0.10	.xxx°±1.0°	

REACH & RoHS COMPLIANT

REV.	ECN / DESCRIPTION	BY	DATE

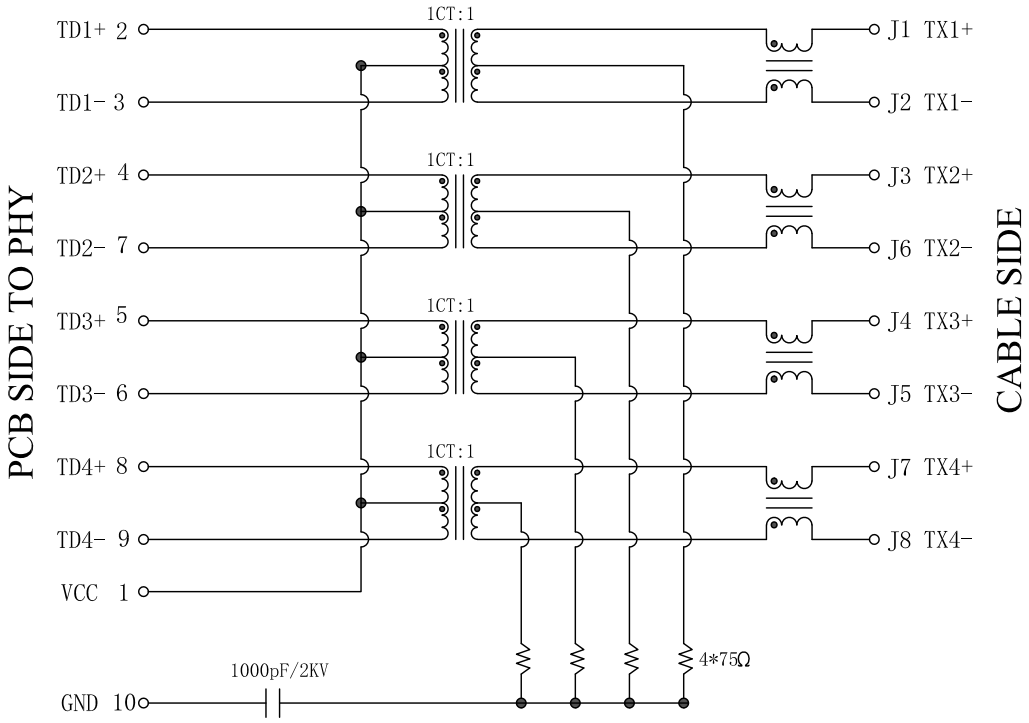

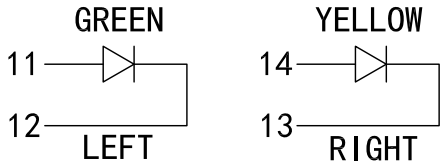

Electrical:

1.Turn ratio:2~3:J1~J2=1CT:1CT(±2%).
4~7:J3~J6=1CT:1CT(±2%).
5~6:J4~J5=1CT:1CT(±2%).
8~9:J7~J8=1CT:1CT(±2%).
2.OCL:350uH Min.at 100KHz 100mV 8mA DC.
3.Insertion Loss: -1.0 dB Max 1~100MHz.
4.Return loss: -18dB Min 1~30MHz;
-14dB Min 30~60MHz.
-12dB Min 60~80MHz.
-10dB Min 80~100MHz.
5.Cross talk: -40dB Min 1~30MHz;
-35dB Min 30~60MHz;
-30dB Min 60~100MHz;
6.CMR: -30dB Min 1~100MHz;
7.Hi-Pot: 2250V DC 6S 1mA PRI TO SEC

LED Specification

Standard LED Color	LED Wavelength	Foward(A)	Foward(V)
Green	568nm	20mA	1.85-2.45V
Yellow	585nm	20mA	1.7-2.2V

深圳市富港科技有限公司

TITLE: TAB-DOWN 1X1 1000BASE	SIZE A4	UNITS MM[INCH]	GENERAL TOLERANCES UNLESS SPECIFIED		APPROVED BY:
PART NO.: RJ-111Q066EA2A1DMZ	SACLE 1:1	REV A0	x±0.35	x°±3.0°	CHECKED BY:
			.x±0.30	.x°±2.0°	
REMARK:	SHEET 3/4		.xx±0.25	.xx°±1.5°	DESIGND BY:
			.xxx±0.10	.xxx°±1.0°	

REACH & RoHS COMPLIANT

PROFILE OF WAVE SOLDER

REV.	ECN / DESCRIPTION	BY	DATE

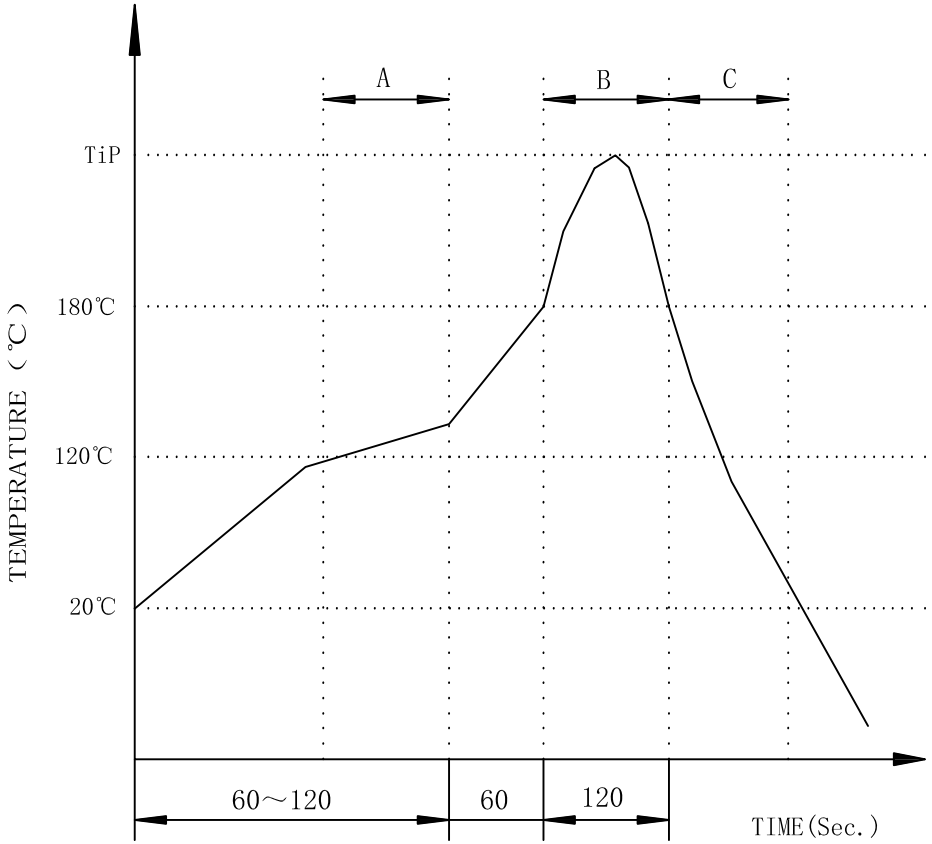

A.Preheating B.Soldering C.Gradual Cooling
Tip temperature:260±5°C.
Tip temperature time:5Sec Max.
Tip melting point of Sn96.5/Ag3/Cu0.5:217°C.

Remarks: after wave soldering, the plastic positioning columns of the product which under the PCB will be slightly melted, but it won't affect its function.

深圳市富港科技有限公司

TITLE: TAB-DOWN 1X1 1000BASE	SIZE A4	UNITS MM[INCH]	GENERAL TOLERANCES UNLESS SPECIFIED		APPROVED BY:
PART NO.: RJ-111Q066EA2A1DMZ	SACLE 1:1	REV A0	x±0.35	x°±3.0°	CHECKED BY:
			.x±0.30	.x°±2.0°	
REMARK:	SHEET 4/4		.xx±0.25	.xx°±1.5°	DESIGND BY:
			.xxx±0.10	.xxx°±1.0°	