REVISIONS					
REV.	ECN NO.	LOCATION	DESCRIPTION	DATE	DESIGN
A0	N/A		INITIAL RELEASE	/	/
A1	N/A			2025.07.01	

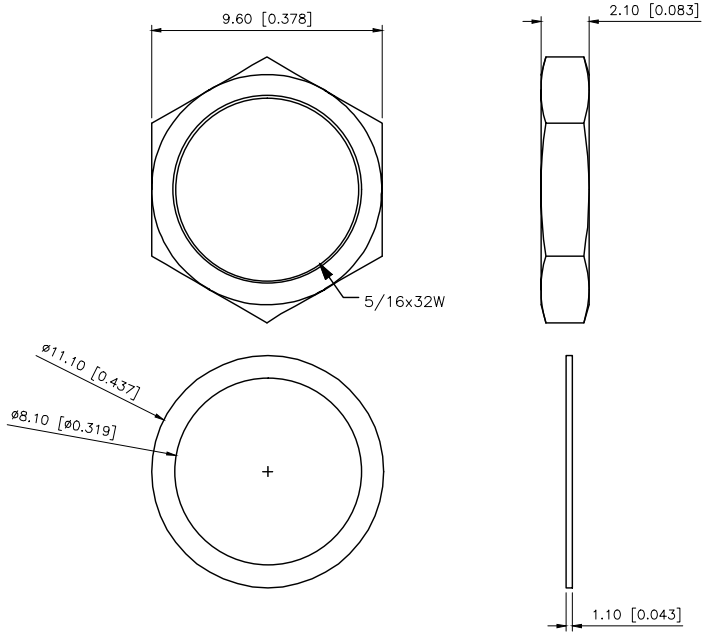

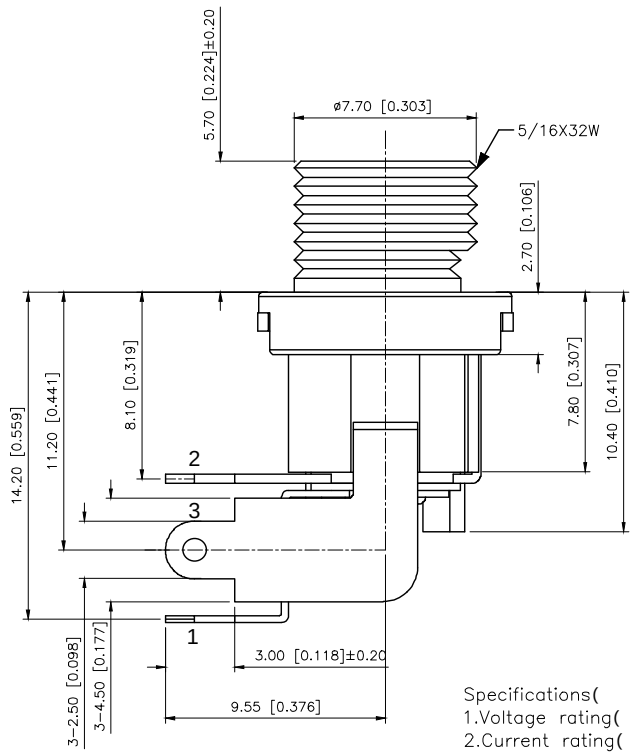

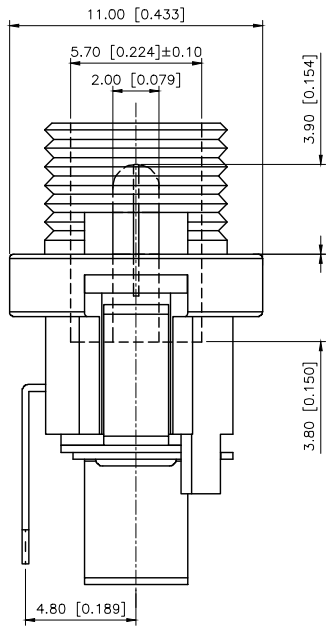

Specifications( )
1.Voltage rating( ):DC 30V
2.Current rating( ):2.0A AC/DC
3.Withstanding voltage( ):≥500V AC/minute
4.Insulation resistance( ):≥100MΩ Min
5.Contact resistance( ):≤30mΩ Max
6.Mating cycles 5000 cycles Min
7.Insertion and extraction force 3~20N
8.Temperature range( ):-30 ~+70

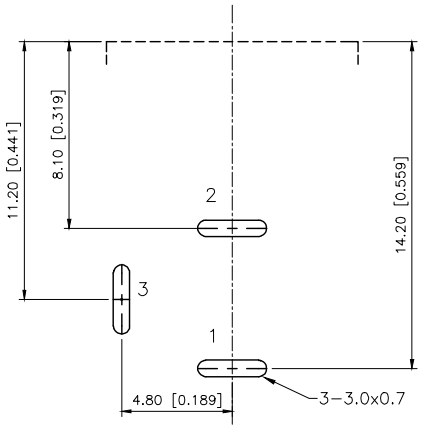

PCB LAYOUT
FRONT VIEW

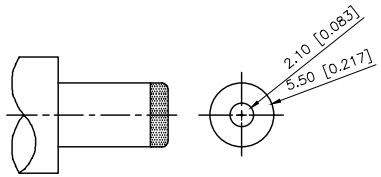

MATING PLUG
Jack Insertion Depth: 9.0 mm

SCHEMATIC	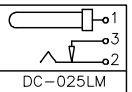
Model	DC-025LM
Center Pin	Ø2.0 mm
	Ø2.5 mm

Terminal 3	Phosphor Bronze	Tin
Terminal 2	Brass	Tin
Terminal 1	Brass	Tin
Center pin	Brass	Tin
Plastic	PBT	
Axle sleeve	Brass	Tin
PAPT NAMF	MATERIAL	PLATING

AuGLAR	±5°
X.	±0.40
X.x	±0.30
X.xx	±0.20
X.xxx	±0.15
UNSPECIFIED TOLERAuCES	

XKB Connection

DESIGN		VIEW:	MODEL TYPE: DC POWER JACK
CHECKED		UNIT: mm/in	PART NO.: DC-025LM-5A-2.0
APPROVED		SIZE: A4	DWG NO.:

XKB INDUSTRIAL PRECISION CO.,LIMITED

SCALE	PAGE	REVISION
N/A	1/1	A1