REVISIONS					
REV.	ECN NO.	LOCATION	DESCRIPTION	DATE	DESIGN
A1	N/A		图面升级整理图面	2025.06.21	阿树
A2	N/A	A2 X2	产品外观，尺寸及材质变更	2025.09.18	阿树

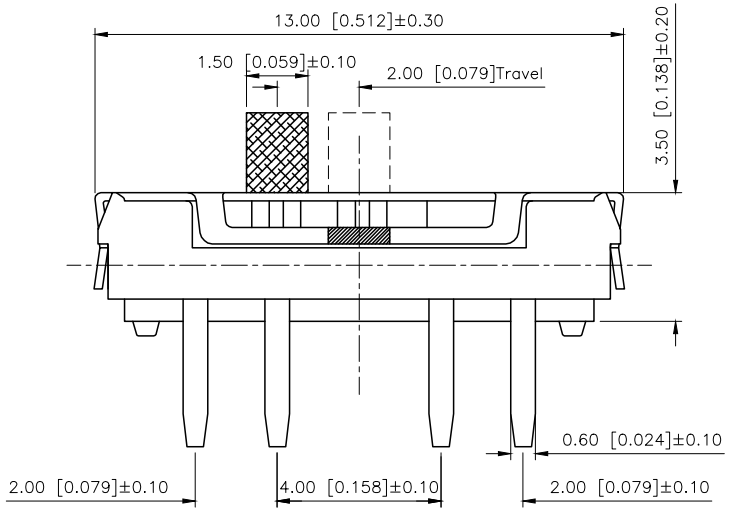

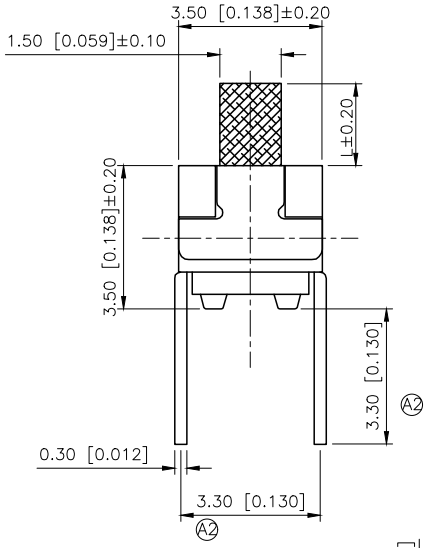

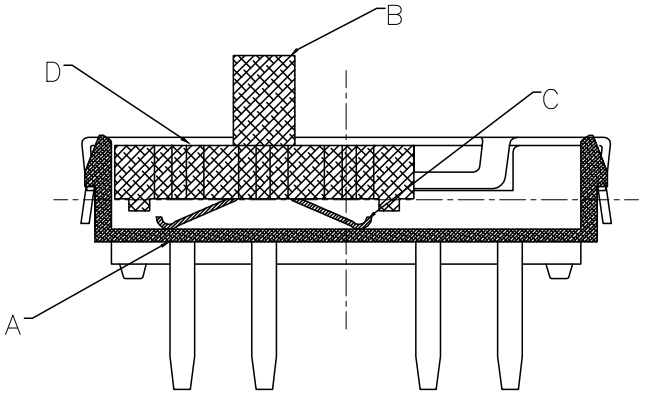

Specifications(规格)：
1.Voltage rating(额定电压):DC 12V
2.Current rating(额定电流):100mA AC/DC
3.Withstanding voltage(耐压值):≥100V AC/minute
4.Insulation resistance(绝缘电阻):≥100MΩ Min
5.Contact resistance(接触电阻):≤80mΩ
6.Mating cycles（使用寿命）：10,000 cycles Min
7.Operating force（操作力度）：200±100gf
8.Temperature range(使用温度):−10℃~+60℃

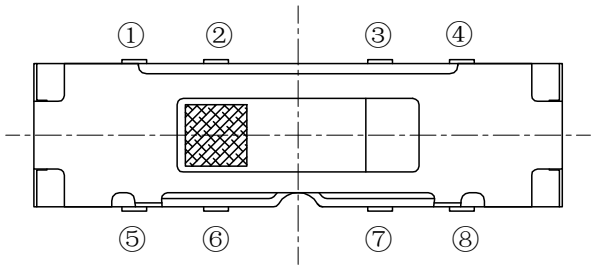

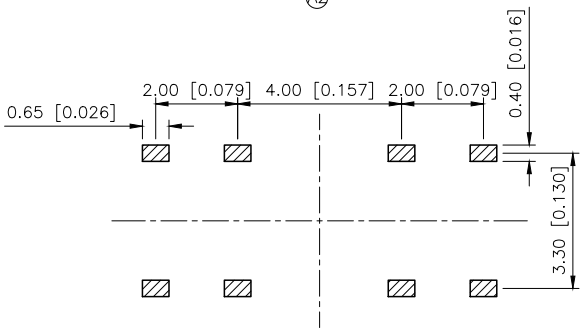

PCB LAYOUT

PAPT NO	L
SS-3336D-02-L1	2.0
SS-3336D-02-L2	3.0
SS-3336D-02-L3	4.0

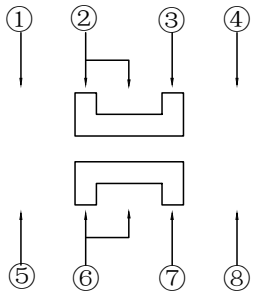

ITEM	PAPT NAME	QTY	MATERIAL	FINISHING/COLOR
4	Contact spring	2	Beryllium bronze	Silver white/Ag Plated
3	Base	1	PPA/Brass	Black/Ag Plated
2	Cover	1	Sus	Silver white
1	Keystake	1	PA46	Black

AuGLAR	±5°
X.	±0.40
X.x	±0.30
X.xx	±0.20
X.xxx	±0.15
UNSPECIFIED TOLERAuCES	

XKB Connection 星坤

DESIGN	阿树	VIEW:	MODEL TYPE: SLIDE SWITCH
CHECKED		UNIT: mm/in	PART NO.: SS-3336D-02-L2
APPROVED		SIZE: A4	DWG NO.: X-SS-3336D-02-L2

XKB INDUSTRIAL PRECISION CO.,LIMITED

SCALE	PAGE	REVISION
N/A	1/1	A2