REVISIONS					
REV.	ECN NO.	LOCATION	DESCRIPTION	DATE	DESIGN
A0	N/A		INITIAL RELEASE	/	/
A1	N/A			2025.03.03	

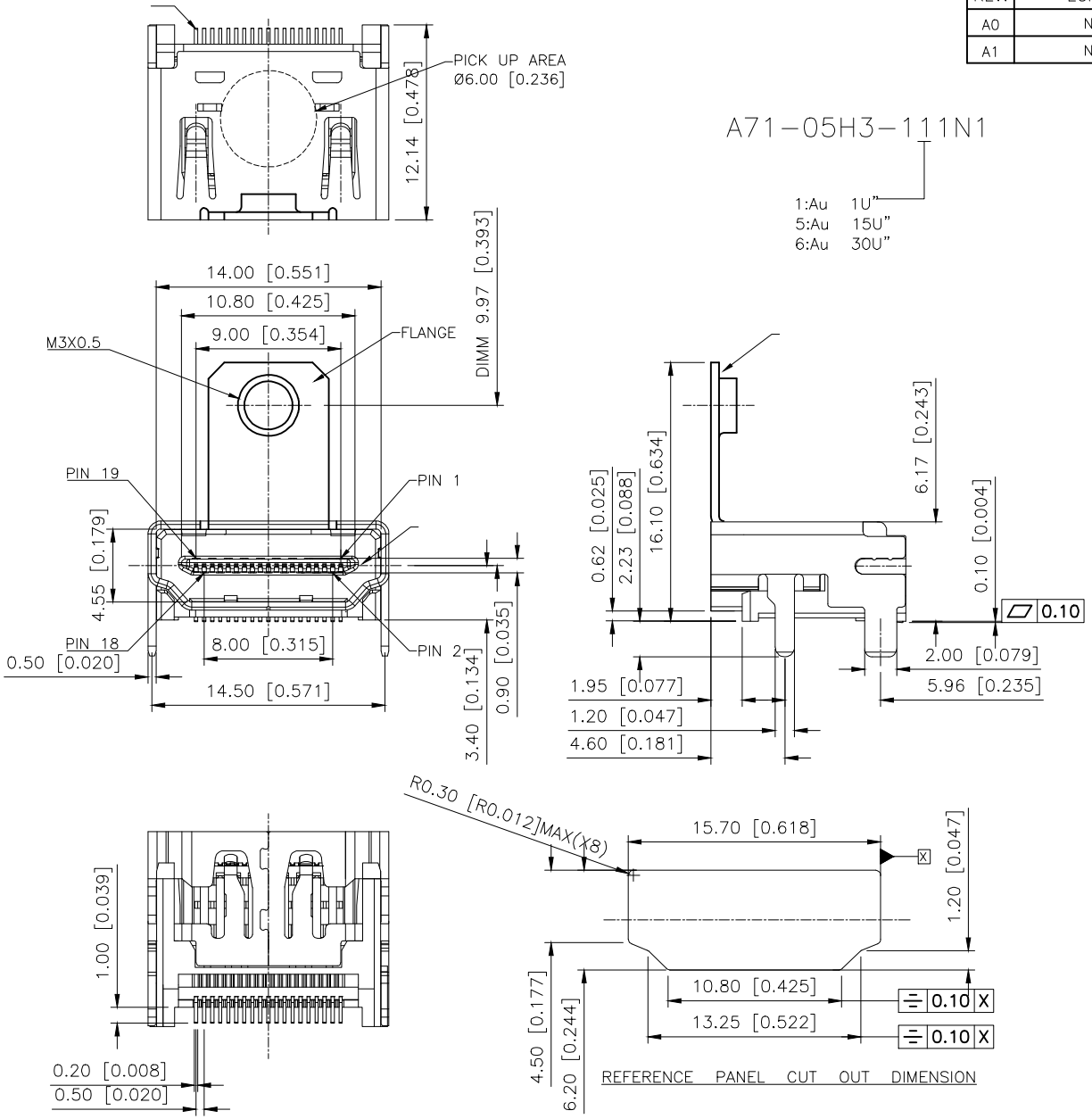

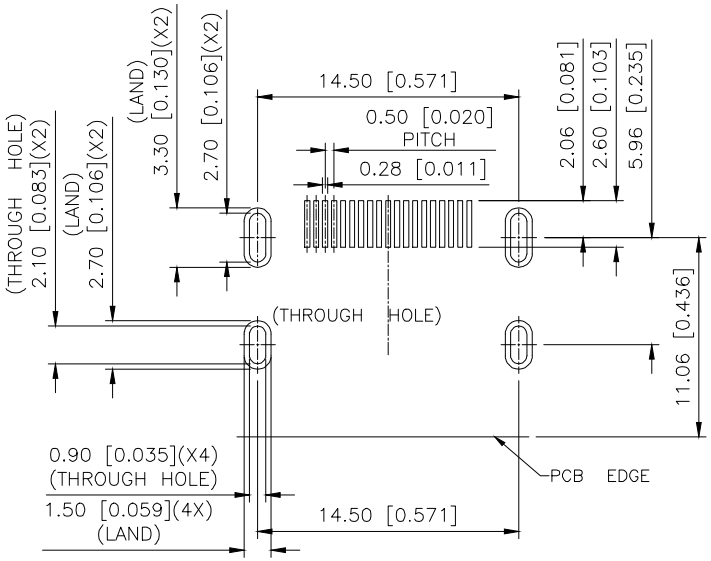

RECOMMENDED PCB LAYOUT (THICKNESS=1.6±0.15mm)

RECOMMENDED P.C.B LAYOUT (T:1.20mm)

TOLERANCE UNSPECIFIED ±0.05mm

SPECIFICATIONS

1.OPERATINGCURRENT:0.5A MAX.
2.OPERATION TEMPERATURE:−25 TO +85
3.DIELECTRICWITHSTANDING VOLTAGE:
500Volts AC BETWEEN ADIACENT TERMINAL(UNMATE)
300Volts AC BETWEEN ADIACENT TERMINAL(MATE)
4.INSULATION RESISTANCE:
100Mohm MIN(UNMATED);10Mohm MIN.(MATED)
5.HDMISPECIFICATION COMPLIANCE

3	CONTACTS	19	COPPER ALLOY,GOLD PLATED OVER NICKEL ON CONTACT AREA AND 100u" MIN.TIN PLATED OVER NICKEL ON SOLDER TAILS
2	HOUSING	1	THERMOPLASTIC UL94V−0
1	SHELL	1	COPPER ALLOY, NICKEL PLATED

AuGLAR	±5°
X.	±0.40
X.x	±0.30
X.xx	±0.20
X.xxx	±0.15
UNSPECIFIED TOLERAuCES	

XKB Connection

DESIGN		VIEW:	MODEL TYPE: HDMI CONNECTOR
CHECKED		UNIT: mm/in	PART NO.: A71−05H3−111N1
APPROVED		SIZE: A4	DWG NO.:

XKB INDUSTRIAL PRECISION CO.,LIMITED

SCALE	PAGE	REVISION
N/A	1/1	A1

www.helloxkb.com www.helloxkb.cn www.xk−dg.cn