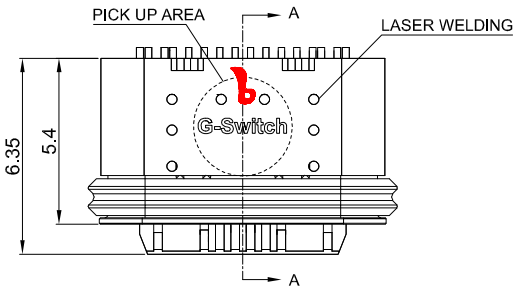


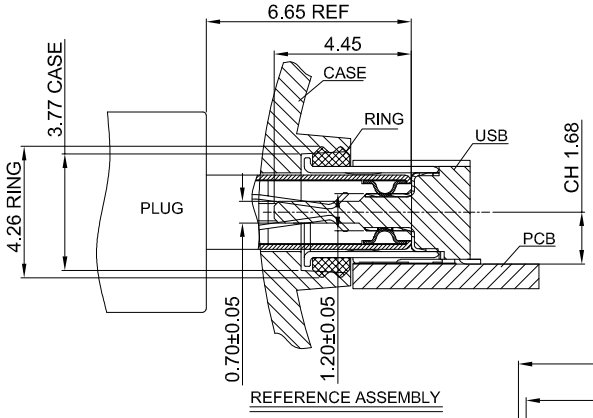


REFERENCE ASSEMBLY

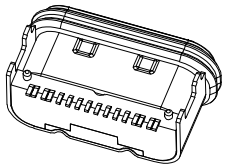

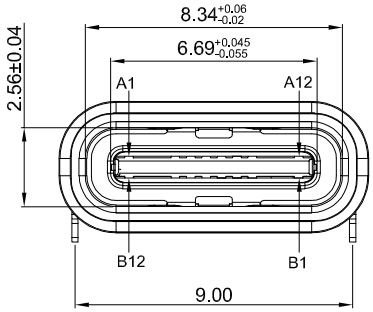


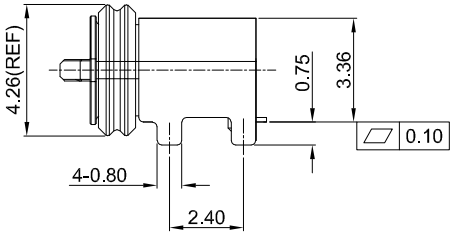


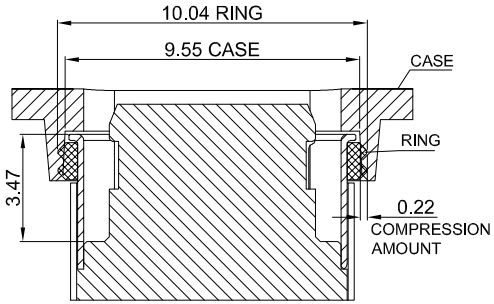


CASE ASSEMBLY FOR REFERENCE

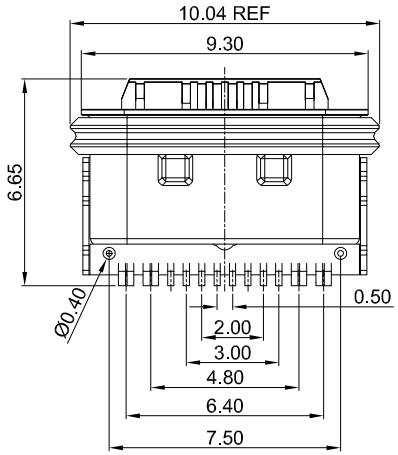


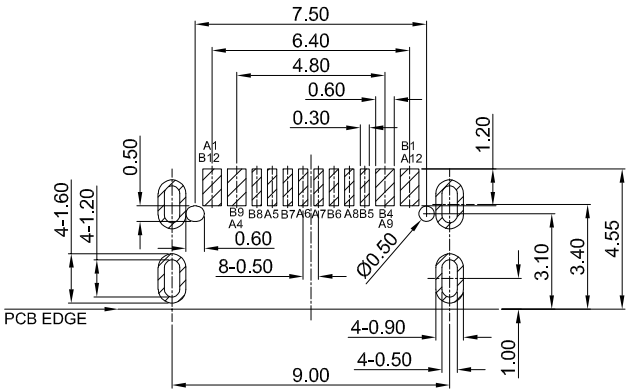


PCB REFERENCE DIAGRAM
TOLERANCE:±0.05

**G-Switch USB-C Specification:**

1.Current rated: 5A on vbus/1.25A on vconn/0.25A on other Voltage rating: 24V AC
2.Withstanding voltage: 100V AC/minute
3.Contact resistance: 40mΩ Max
4.Insulation resistance: 100MΩ Min
5.Operating temperature: -40°C ~ +85°C
6.Mating force: 5N~20N
7.Unmating force: 8N~20N
8.Durability cycle:10,000 cycles
9.Waterproof grade: IP-X5
10.Compliant with: IEC62680-1-3

USB IF TID:12863

| A1 | A2 | A3 | A4 | A5 | A6 | A7 | A8 | A9 | A10 | A11 | A12 |
|---|---|---|---|---|---|---|---|---|---|---|---|
| GND | | | VBUS | CC1 | D+ | D- | SBU1 | VBUS | | | GND |
| First | | | First | Second | Second | Second | Second | First | | | First |

| B12 | B11 | B10 | B9 | B8 | B7 | B6 | B5 | B4 | B3 | B2 | B1 |
|---|---|---|---|---|---|---|---|---|---|---|---|
| GND | | | VBUS | SBU2 | D- | D+ | CC2 | VBUS | | | GND |
| First | | | First | Second | Second | Second | Second | First | | | First |

| NO. | PARTS | MATERIAL | REMARKS |
|---|---|---|---|
| 1 | COVER SHELL | STAINLESS STEEL | Ni30u"Min PLATED |
| 2 | SHELL | STAINLESS STEEL | Ni30u"Min PLATED |
| 3 | EMI | STAINLESS STEEL | -- |
| 4 | MID PLATE | STAINLESS STEEL | -- |
| 5 | HOUSING | HIGH TEMPERATURE PLASTIC | BLACK UL 94 V-0 |
| 6 | TERMINALS | COPPER ALLOY | Au1u" Min PLATING ON CONTACT AREA |
| 7 | WATERPROOF RING | SILICA GEL | BLUE |

Pb Process Capable

RoHS Compliant EU RoHS Standards

HALOGEN Compliant Halogen Free

| | | | |
|---|---|---|---|
| SCALE: 1:1 | UNIT: mm | Title: | IPX5 Horizontal Type-C 16P Female SMT CH=1.68 L=5.4mm |
| SIZE: A4 | | Molde Code: | GT-USB-9079C |

Unless otherwise General Tolerance:

| | |
|---|---|
| X. | ±0.40 |
| X.x | ±0.30 |
| X.xx | ±0.20 |
| X.xxx | ±0.10 |
| X° | ±5° |

| DRAWN | CHECKED | APPROVED | DATE |
|---|---|---|---|
| Xia | Chen | Chen | 2024.03.10 |

品赞科技 b-Switch ®
www.dg-switch.com

REV: A0 SHEET: 1/1



品赞电子（东莞）有限公司