REVISIONS					
REV.	ECN NO.	LOCATION	DESCRIPTION	DATE	DESIGN
A0	N/A		INITIAL RELEASE	/	/
A1	N/A		图面升级整理图面	2025.2.11	阿树

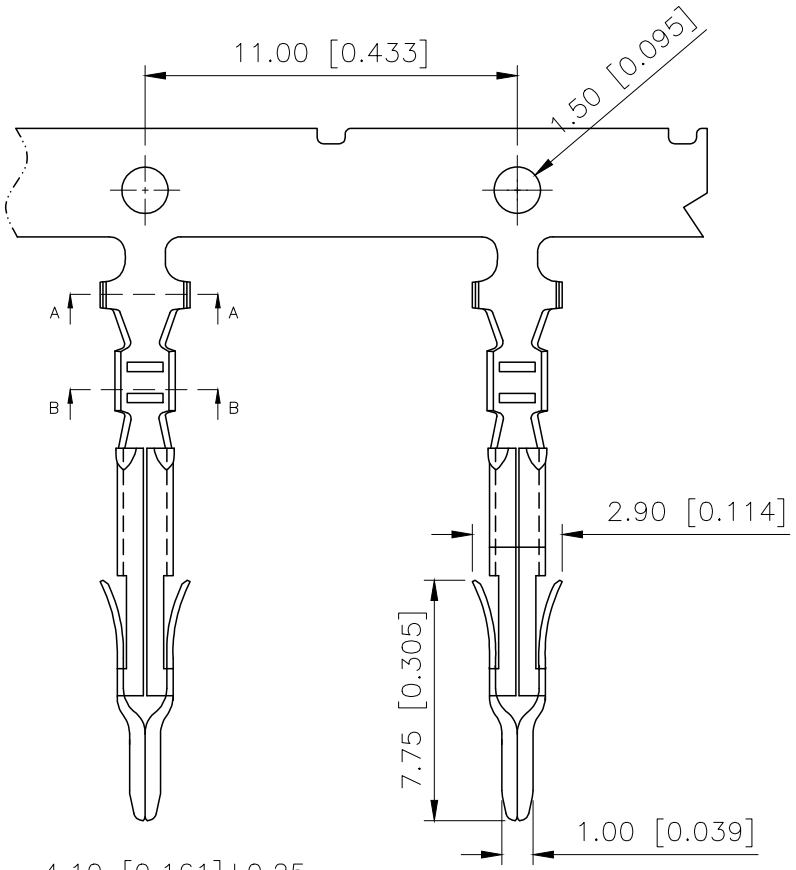

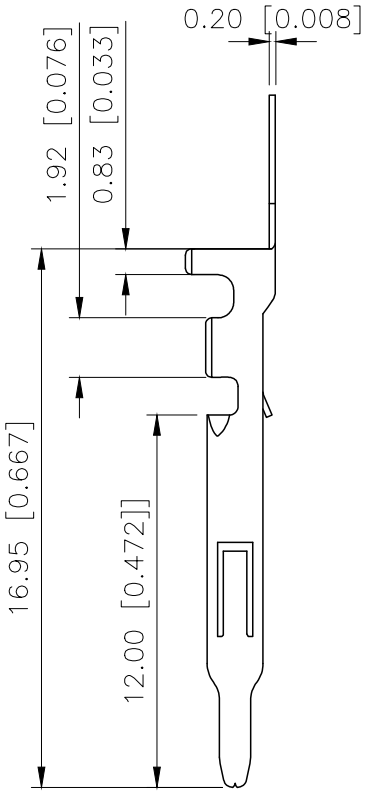

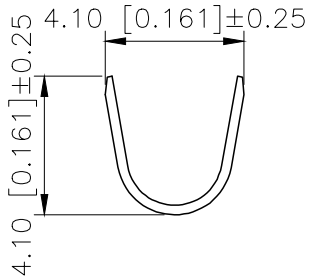

SEC:A–A

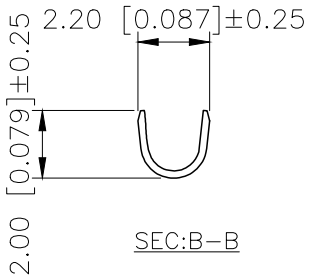

SEC:B–B

Specifications:
规格：
Voltage rating:600V AC/DC
额定电压：600V AC/DC
Current rating:5A AC/DC
额定电流：5A AC/DC
Withstanding voltage:1500V AC/minute
耐受电压：1500V AC/分钟
Temperature range:−40℃−+125℃
温度范围：−40℃−+125℃
Insulation resistance:1000MΩ min
绝缘电阻：1000MΩ min
Contact resistance:20mΩ max
接触电阻：20mΩ max

PART NO.:

X4140 T M−B SN
① ② ③ ④ ⑤

①Series Number.
②Category: T−terminal
③Category:M−Male Terminal
④Material:B−Brass
⑤Finish:SN−Tin−plated

PART NO	Material	Finish	Wire Range	Suitable XKB Housing
X4140TM−BSN	Brass	Tin−plated	AWG22#−26#	X4140HF

AuGLAR	±5°
X.	±0.40
X.x	±0.30
X.xx	±0.20
X.xxx	±0.15
UNSPECIFIED TOLERAuCES	

XKB Connection 星创

DESIGN	阿树	VIEW:	MODEL TYPE: 4.14mm Crimp Style Connector
CHECKED		UNIT: mm/in	PART NO.: X4140TM−BSN
APPROVED		SIZE: A4	DWG NO.:

XKB INDUSTRIAL PRECISION CO.,LIMITED

SCALE	PAGE	REVISION
N/A	1/1	A1