REVISIONS					
REV.	ECN NO.	LOCATION	DESCRIPTION	DATE	DESIGN
A0	N/A		INITIAL RELEASE		
A1	N/A			2024.07.10	阿 树

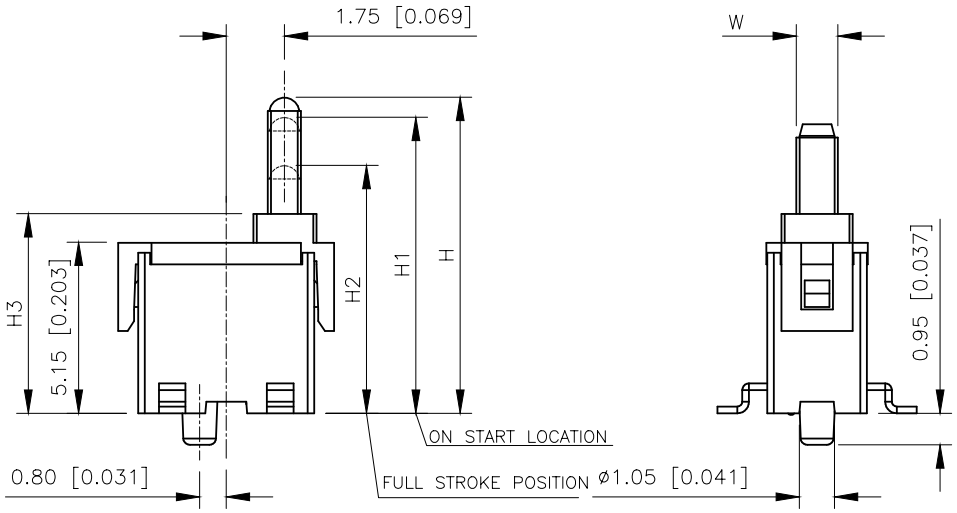

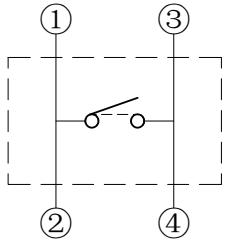

SCHEMATIC
NORMALLY OPEN

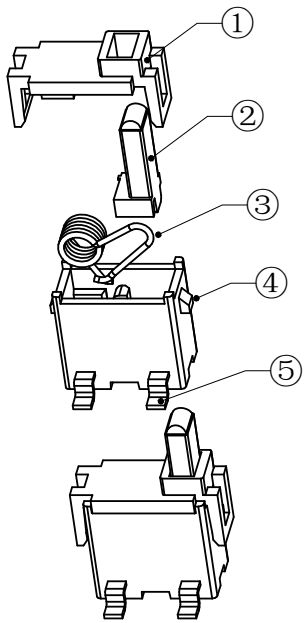

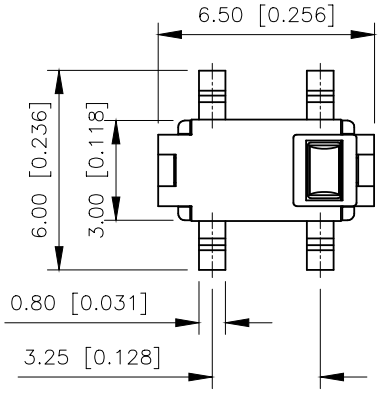

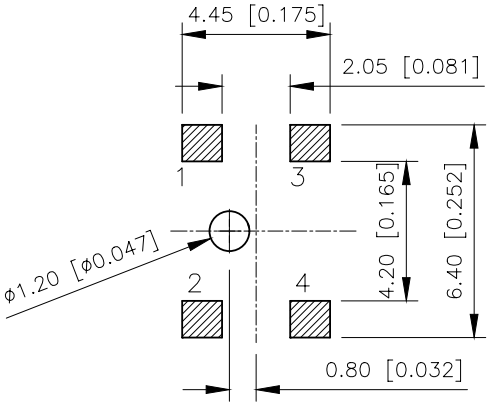

PCB LAYOUT(TOP VIEW)

NOTE
RATING:DC 30V 0.1A
Operating Force: 40±10gf
Lifetime:100,000 Cycles

PART NO.	H	H1	H2	H3	W
TM-T07A-2	8.50	7.90	6.45	6.00	1.65
TM-T07A-3	8.70	8.10	6.65		
TM-T07A-4	9.50	8.90	7.45		1.25
TM-T07A-1	10.50	9.90	8.45	7.10	
TM-T07A-5	11.00	10.40	8.95		
TM-T07A-7	11.50	10.90	9.45		
TM-T07A-6	12.20	11.60	10.15		1.50

NO	NAME	QTY	SPECIFICATION	REMARK
5	WELDING FEET	1	BRASS	CU/EP.Ni Ag
4	PEDESTAL	1	PPA	BLACK
3	ELASTIC PRESSURE	1	Phosphor copper wire	CU/EP.Ni Ag
2	DIAL HANDLE	1	PPA	BLACK
1	LID	1	PPA	BLACK

ANGLAR	±5°
X.	±0.40
X.x	±0.30
X.xx	±0.20
X.xxx	±0.15
UNSPECIFIED TOLERANCES	

XKB

DESIGN	阿 树	VIEW:	MODEL TYPE: DETECT SWITCH
CHECKED		UNIT: mm/in	PART NO.: TM-T07A-4
APPROVED		SIZE: A4	DWG NO.: X-TM-T07A-4

XKB INDUSTRIAL PRECISION CO.,LIMITED

SCALE	PAGE	REVISION
N/A	1/1	A1