REVISIONS					
REV.	ECN NO.	LOCATION	DESCRIPTION	DATE	DESIGN
A1	N/A		独立各PIN数图纸，增加开孔定位尺寸	2024.12.12	阿树
A2	ECN-P-2025110501	A2 X5	产品尺寸及电气性能变更	2025.11.05	阿树

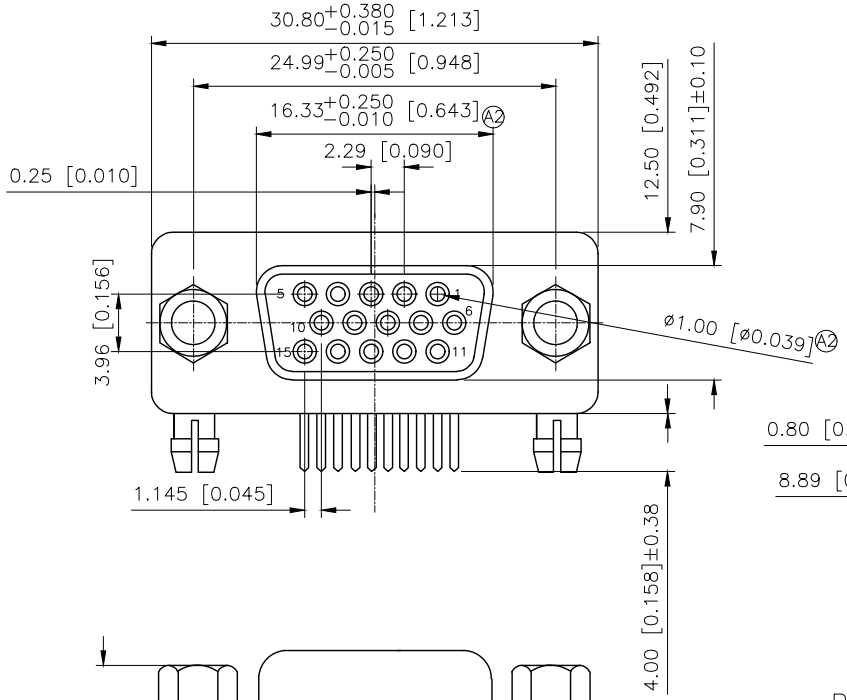

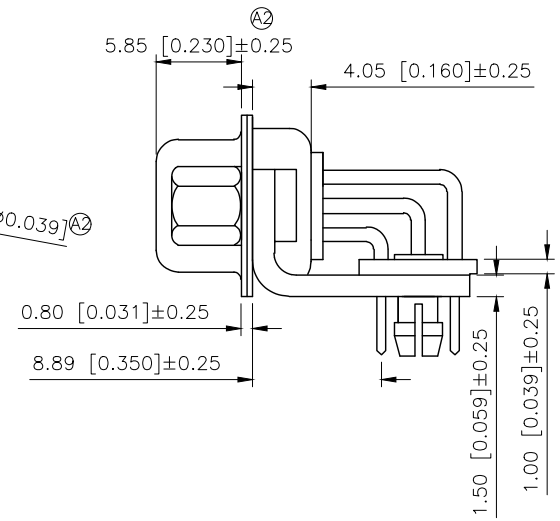

Specifications:
规格：
Current rating:5A AC/DC
额定电流：5A AC/DC
Voltage rating:500V AC
额定电压：500V AC
Withstanding voltage:1000V AC/MIN
耐受电压：≥1000V AC/分钟
Temperature range:−55℃−+105℃
温度范围：−55℃−+105℃
Insulation resistance:5000MΩMIN
绝缘电阻：≥5000MΩ
Contact resistance:30mΩMAN
接触电阻:≤30mΩ
Materiai And FINISHED:
材料和成本:
INSULATOR:PBT+30% GLASS FILLED UL 94V−0
绝缘体：PBT+30% 玻璃填充 UL 94V−0
SHELL: Steel Plated Tin
外壳：钢 镀锡
CONTACT MATERIAL:Brass
触点材料：黄铜
CONTACT FINISH:FULL GOLD FLASH
触点电镀：镀金

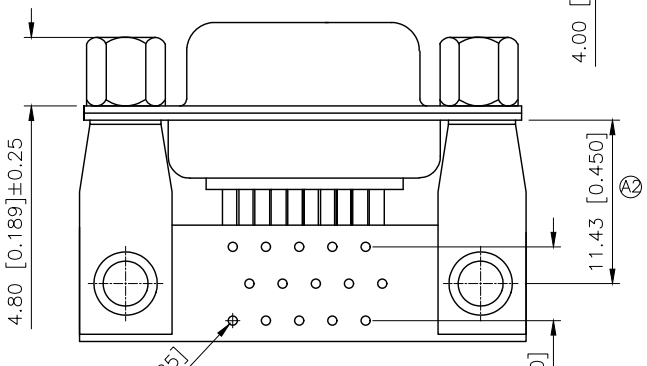

PART NO.:

X06 15 F C 2 W 1
① ② ③ ④ ⑤ ⑥ ⑦

①Series No
②Pin No.:15PIN
③Welding Board Angle :F−Female
④C：Car−pin
⑤Planting Categotry:
1:1U 2:2U 3:3U 4:5U 5:15U 6:30U 7:AuSn
⑥B:Black W:White BL:Blue Y:Yellow G:Green R:Red
⑦1:TYPE−1; 2:TYPE−2

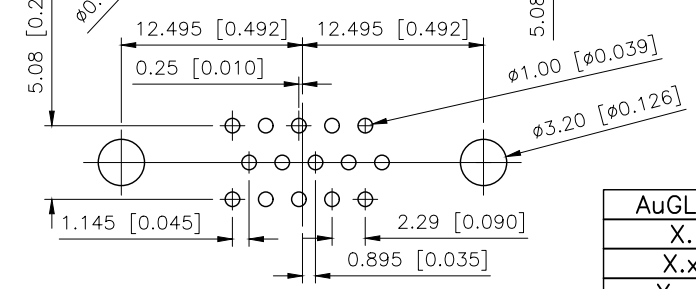

PCB LAYOUT

铆合方式	TYPE-1：铆合	TYPE-2：铆合锁螺丝
图式	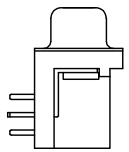	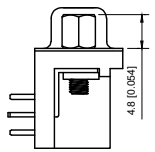

AuGLAR	±5°
X.	±0.40
X.x	±0.30
X.xx	±0.20
X.xxx	±0.15
UNSPECIFIED	TOLERAuCES

XKB Connection

DESIGN	阿树	VIEW:	MODEL TYPE: D-SUB
CHECKED		UNIT: mm/in	PART NO.: X0615FC2W1
APPROVED		SIZE: A4	DWG NO.: X-X0615FC2W1

XKB INDUSTRIAL PRECISION CO.,LIMITED

SCALE	PAGE	REVISION
N/A	1/1	A2