Low Noise Amplifier with Bypass Switch for LTE

FEATURES

- Operating frequency:
  Middle-Band (MB): 1425MHz to 2200MHz
  High-Band (HB): 2300MHz to 2700MHz
- Noise figure: 0.6dB@MB, 0.75@HB
- High power gain: 21dB@MB, 19.5dB@HB
- Insertion loss in bypass mode: 5dB@MB, 5.5dB@HB
- Supply voltage: 1.6V to 3.1V
- Gain mode current 10.6mA
- Bypass mode current <1uA
- Input and output DC decoupled
- DFN 1.1X0.7-6L

APPLICATIONS

- Cell phones
- Tablets
- Other RF front-end modules

GENERAL DESCRIPTION

- The AW5008HGDNR is a Low Noise Amplifier with bypass designed for LTE receiver applications. The AW5008HGDNR requires only one external input matching inductor, reduces assembly complexity and the PCB area, enabling a cost-effective solution.
- The AW5008HGDNR achieves low noise figure, high linearity, high gain, over a wide range of supply voltages from 1.6V up to 3.1V. All these features make AW5008HGDNR an excellent choice for LTE LNA as it improves sensitivity with low noise figure and high gain, provides better immunity against jammer signals with high linearity, reduces filtering requirement of preceding stage and hence reduces the overall cost.
- The AW5008HGDNR is available in a small lead-free, RoHS-Compliant, DFN 1.1X0.7-6L.

Awinic Confidential

 © 2025 Shanghai Awinic Technology Co., Ltd. All Rights Reserved

TYPICAL APPLICATION CIRCUIT

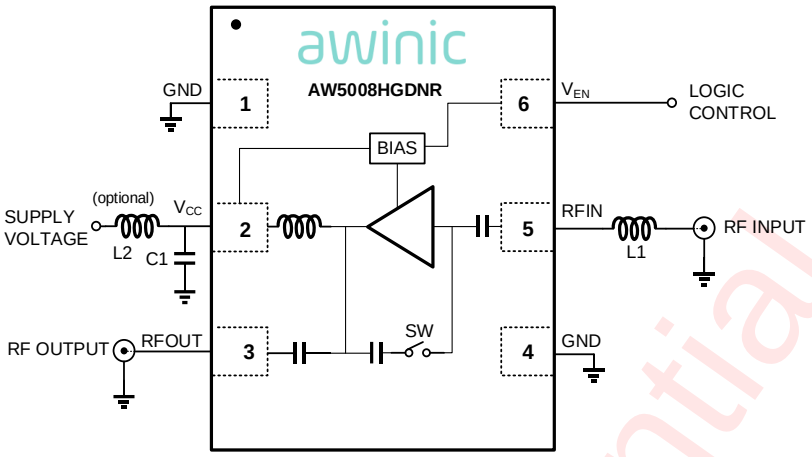

Figure 1 Typical Application Circuit of AW5008HGDNR

Inductor Selection Table

Part	Serial	Typical(nH)	MFR	Size	Frequency range(MHz)
L1	LQW15A	8	Murata	0402	1425~1560
L1	LQW15A	4.2	Murata	0402	1800~2200
L1	LQW15A	3	Murata	0402	2300~2700

Capacitor Selection Table

Part	Serial	Typical(pF)	MFR	Size
C1	GRM155	1000	Murata	0402

Awinic Confidential

 © 2025 Shanghai Awinic Technology Co., Ltd. All Rights Reserved

PIN CONFIGURATION AND TOP MARK

AW5008HGDNR
(Top View)

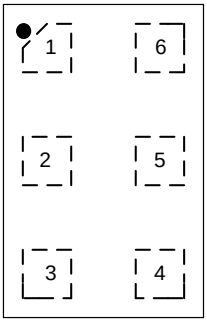

AW5008HGDNR Marking
(Top View)

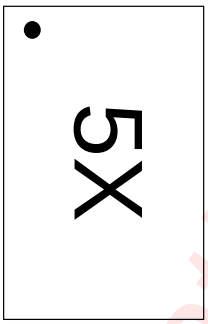

5 – AW5008HGDNR
X – Production Tracing Code

Figure 2 Pin Configuration and Top Mark

PIN DEFINITION

No.	NAME	DESCRIPTION
1	GND	Ground
2	V_{CC}	Power supply
3	RFOUT	RF output
4	GND	Ground
5	RFIN	RF input
6	V_{EN}	Gain mode and bypass mode select pin

Awinic Confidential

 © 2025 Shanghai Awinic Technology Co., Ltd. All Rights Reserved

FUNCTIONAL BLOCK DIAGRAM

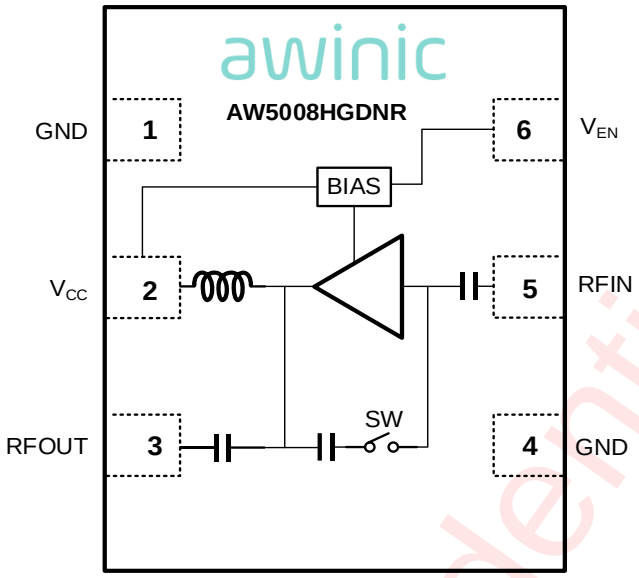

Figure 3 Functional Block Diagram

ORDERING INFORMATION

Part Number	Temperature	Package	Marking	Moisture Sensitivity Level	Environmental Information	Delivery Form
AW5008HGDNR	-40°C~105°C	DFN 1.1X0.7-6L	5	MSL1	ROHS+HF	9000 units/Tape & Reel

Awinic Confidential

 © 2025 Shanghai Awinic Technology Co., Ltd. All Rights Reserved

ABSOLUTE MAXIMUM RATINGS[1]

PARAMETERS	RANGE
Supply voltage V_{CC}	-0.3V to 3.3V
Control voltage V_{EN}	-0.3V to V_{CC}
Maximum RF input power	25dBm
Maximum junction temperature T_{JMAX}	150°C
Storage temperature T_{STG}	-65°C to 150°C
Operating free-air temperature range	-40°C to 105°C
Lead temperature (Soldering 10 Seconds)	260°C
ESD[2]	
HBM	±2000V
CDM	±1500V
Latch-Up	
JESD78F	+IT: 450mA; -IT: -450mA

[1] Conditions out of those ranges listed in “absolute maximum ratings” may cause permanent damages to the device. In spite of the limits above, functional operation conditions of the device should within the ranges listed in “recommended operating conditions”. Exposure to absolute-maximum-rated conditions for prolonged periods may affect device reliability.
[2] HBM: ESDA/JEDEC JS-001-2023; CDM: ESDA/JEDEC JS -002-2022.

Awinic Confidential

 © 2025 Shanghai Awinic Technology Co., Ltd. All Rights Reserved

ELECTRICAL CHARACTERISTICS

DC Characteristic

SYMBOL	PARAMETER	TEST CONDITION	MIN	TYP	MAX	UNIT
V_{CC}[1]	Supply voltage	-	1.6	1.8/2.8	3.1	V
V_{EN_H}[1]	Control voltage high	V_{CC}=1.8V&2.8V	0.8	-	V_{CC}	V
V_{EN_L}[1]	Control voltage low	V_{CC}=1.8V&2.8V	0	-	0.3	V
I_{CC}	Supply current, gain mode	V_{CC}=2.8V, V_{EN}≥0.8V	-	11.1	15	mA
		V_{CC}=1.8V, V_{EN}≥0.8V	-	10.6	15	mA
	Supply current, bypass mode	V_{CC}=3.1V, V_{EN}≤0.3V	-	-	1	μA
I_{EN}	Control current	V_{CC}=V_{EN_H}=3.1V	-	1.3	2	μA

[1] Minimum and/or maximum limit is guaranteed by design and by statistical analysis of device characterization data. The specification is not guaranteed by production testing.

Switching Characteristic

SYMBOL	PARAMETER	TEST CONDITION	MIN	TYP	MAX	UNIT
T_{ON}[1]	Turn-on time	50% V_{EN} to 90% of RF Output, V_{CC}=2.8V	-	0.3	1	μs
		50% V_{EN} to 90% of RF Output, V_{CC}=1.8V	-	0.5	1	μs
T_{OFF}[1]	Turn-off time	50% V_{EN} to 10% of RF Output, V_{CC}=2.8V	-	0.1	1	μs
		50% V_{EN} to 10% of RF Output, V_{CC}=1.8V	-	0.1	1	μs

[1] Minimum and/or maximum limit is guaranteed by design and by statistical analysis of device characterization data. The specification is not guaranteed by production testing.

Typically: T_A=+25°C, V_{CC}=2.8V, frequency=1425MHz to 1560MHz. Input matched to 50Ω. (unless otherwise noted).

SYMBOL	PARAMETER	TEST CONDITION	MIN	TYP	MAX	UNIT
Gain Mode (V_{EN}=2.8V)						
G_P	Power gain	PIN=-30dBm	18.5	22	24	dB
RL_in	Input return loss		4.5	6.5	-	dB
RL_out	Output return loss		5	7.5	-	dB
ISL	Reverse isolation	-	20	33	-	dB
NF[1]	Noise figure	-	-	0.55	1	dB
IP1dB[1]	In-band input 1dB-compression point	-	-17	-14	-	dBm
IIP3ib[1]	In-band input 3rd-order intercept point	f1=1452MHz@-25dBm, f2=1453MHz@-25dBm	-10.5	-5.4	-	dBm
Kf[1]	Stability factor	20MHz~10GHz	1	-	-	-
Bypass Mode(V_{EN}=0V)						
IL	Insertion loss	PIN=-30dBm	-	5.3	9	dB
RL_in	Input return loss		8	23	-	dB
RL_out	Output return loss		7	10	-	dB
IP1dB[1]	In-band input 1dB-compression point	-	0	5.2	-	dBm

[1] Minimum and/or maximum limit is guaranteed by design and by statistical analysis of device characterization data. The specification is not guaranteed by production testing.

awinic Confidential

 © 2025 Shanghai Awinic Technology Co., Ltd. All Rights Reserved

Typically: T_A=+25°C, V_{CC}=1.8V, frequency=1425MHz to 1560MHz. Input matched to 50Ω. (unless otherwise noted).

SYMBOL	PARAMETER	TEST CONDITION	MIN	TYP	MAX	UNIT
Gain Mode(V_{EN}=1.8V)						
G_P	Power gain	PIN=-30dBm	18	21.5	23.5	dB
RL_in	Input return loss		4.5	6.1	-	dB
RL_out	Output return loss		5	7.5	-	dB
ISL	Reverse isolation	-	20	33	-	dB
NF[1]	Noise figure	-	-	0.55	1	dB
IP1dB[1]	In-band input 1dB-compression point	-	-19.5	-16.5	-	dBm
IIP3ib[1]	In-band input 3rd-order intercept point	f1=1452MHz@-25dBm, f2=1453MHz@-25dBm	-14	-9.2	-	dBm
Kf[1]	Stability factor	20MHz~10GHz	1	-	-	-
Bypass Mode(V_{EN}=0V)						
IL	Insertion loss	PIN=-30dBm	-	5.7	9	dB
RL_in	Input return loss		8	21	-	dB
RL_out	Output return loss		6	10	-	dB
IP1dB[1]	In-band input 1dB-compression point	-	0	5.2	-	dBm

[1] Minimum and/or maximum limit is guaranteed by design and by statistical analysis of device characterization data. The specification is not guaranteed by production testing.

Typically: T_A=+25°C, V_{CC}=2.8V, frequency=1800MHz to 2200MHz. Input matched to 50Ω. (unless otherwise noted).

SYMBOL	PARAMETER	TEST CONDITION	MIN	TYP	MAX	UNIT
Gain Mode(V_{EN}=2.8V)						
G_P	Power gain	PIN=-30dBm	17.5	21	23	dB
RL_in	Input return loss		6	9.5	-	dB
RL_out	Output return loss		7	9	-	dB
ISL	Reverse isolation	-	20	31	-	dB
NF[1]	Noise figure	-	-	0.6	1	dB
IP1dB[1]	In-band input 1dB-compression point	-	-16	-13	-	dBm
IIP3ib[1]	In-band input 3rd-order intercept point	f1=2140MHz@-25dBm, f2=2141MHz@-25dBm	-7.5	-2.5	-	dBm
Kf[1]	Stability factor	20MHz~10GHz	1	-	-	-
Bypass Mode(V_{EN}=0V)						
IL	Insertion loss	PIN=-30dBm	-	5	9	dB
RL_in	Input return loss		6	9	-	dB
RL_out	Output return loss		7	10.5	-	dB
IP1dB[1]	In-band input 1dB-compression point	-	1	6	-	dBm

[1] Minimum and/or maximum limit is guaranteed by design and by statistical analysis of device characterization data. The specification is not guaranteed by production testing.

Awinic Confidential

 © 2025 Shanghai Awinic Technology Co., Ltd. All Rights Reserved

Typically: T_A=+25°C, V_{CC}=1.8V, frequency=1800MHz to 2200MHz. Input matched to 50Ω. (unless otherwise noted).

SYMBOL	PARAMETER	TEST CONDITION	MIN	TYP	MAX	UNIT
Gain Mode(V_{EN}=1.8V)						
G_P	Power gain	PIN=-30dBm	17	20.5	22.5	dB
RL_in	Input return loss		6	8.5	-	dB
RL_out	Output return loss		7	9.5	-	dB
ISL	Reverse isolation	-	20	30	-	dB
NF[1]	Noise figure	-	-	0.6	1	dB
IP1dB[1]	In-band input 1dB-compression point	-	-17	-14.3	-	dBm
IIP3ib[1]	In-band input 3rd-order intercept point	f1=2140MHz@-25dBm, f2=2141MHz@-25dBm	-8.5	-3.3	-	dBm
Kf[1]	Stability factor	20MHz~10GHz	1	-	-	-
Bypass Mode(V_{EN}=0V)						
IL	Insertion loss	PIN=-30dBm	-	5.5	9	dB
RL_in	Input return loss		6	8.5	-	dB
RL_out	Output return loss		6	11	-	dB
IP1dB[1]	In-band input 1dB-compression point	-	1	5.8	-	dBm

[1] Minimum and/or maximum limit is guaranteed by design and by statistical analysis of device characterization data. The specification is not guaranteed by production testing.

Typically: T_A=+25°C, V_{CC}=2.8V, frequency=2300MHz to 2700MHz. Input matched to 50Ω. (unless otherwise noted).

SYMBOL	PARAMETER	TEST CONDITION	MIN	TYP	MAX	UNIT
Gain Mode(V_{EN}=2.8V)						
G_P	Power gain	PIN=-30dBm	16.5	19.5	22	dB
RL_in	Input return loss		5.5	8.5	-	dB
RL_out	Output return loss		6	9	-	dB
ISL	Reverse isolation	-	20	30	-	dB
NF[1]	Noise figure	-	-	0.75	1.1	dB
IP1dB[1]	In-band input 1dB-compression point	-	-15	-11.3	-	dBm
IIP3ib[1]	In-band input 3rd-order intercept point	f1=2690MHz@-25dBm, f2=2691MHz@-25dBm	-5.5	-0.5	-	dBm
Kf[1]	Stability factor	20MHz~10GHz	1	-	-	-
Bypass Mode(V_{EN}=0V)						
IL	Insertion loss	PIN=-30dBm	-	5.5	10	dB
RL_in	Input return loss		5	7	-	dB
RL_out	Output return loss		7	9	-	dB
IP1dB[1]	In-band input 1dB-compression point	-	2.5	7.4	-	dBm

[1] Minimum and/or maximum limit is guaranteed by design and by statistical analysis of device characterization data. The specification is not guaranteed by production testing.

Awinic Confidential

 © 2025 Shanghai Awinic Technology Co., Ltd. All Rights Reserved

Typically: T_A=+25°C, V_{CC}=1.8V, frequency=2300MHz to 2700MHz. Input matched to 50Ω. (unless otherwise noted).

SYMBOL	PARAMETER	TEST CONDITION	MIN	TYP	MAX	UNIT
Gain Mode(V_{EN}=1.8V)						
G_P	Power gain	PIN=-30dBm	16	19	21.5	dB
RL_in	Input return loss		5.5	8	-	dB
RL_out	Output return loss		6	8.5	-	dB
ISL	Reverse isolation	-	20	30	-	dB
NF[1]	Noise figure	-	-	0.75	1.1	dB
IP1dB[1]	In-band input 1dB-compression point	-	-16	-12.3	-	dBm
IIP3ib[1]	In-band input 3rd-order intercept point	f1=2690MHz@-25dBm, f2=2691MHz@-25dBm	-6	-1	-	dBm
Kf[1]	Stability factor	20MHz~10GHz	1	-	-	-
Bypass Mode(V_{EN}=0V)						
IL	Insertion loss	PIN=-30dBm	-	6	10	dB
RL_in	Input return loss		5	6.5	-	dB
RL_out	Output return loss		6	9.5	-	dB
IP1dB[1]	In-band input 1dB-compression point	-	2	7	-	dBm

[1] Minimum and/or maximum limit is guaranteed by design and by statistical analysis of device characterization data. The specification is not guaranteed by production testing.

Awinic Confidential

 © 2025 Shanghai Awinic Technology Co., Ltd. All Rights Reserved

PACKAGE DESCRIPTION

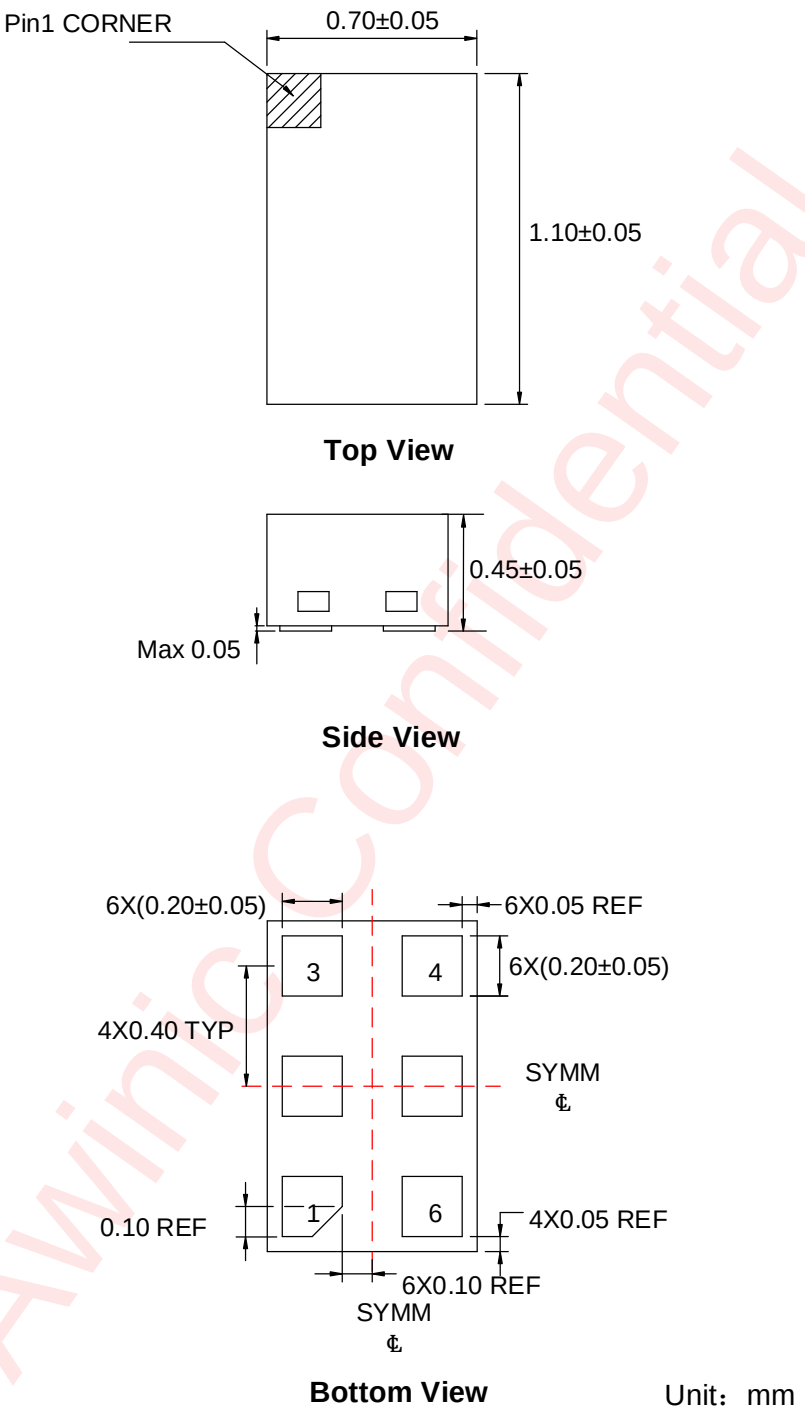

Figure 4 Package Outline

Awinic Confidential

 © 2025 Shanghai Awinic Technology Co., Ltd. All Rights Reserved

LAND PATTERN

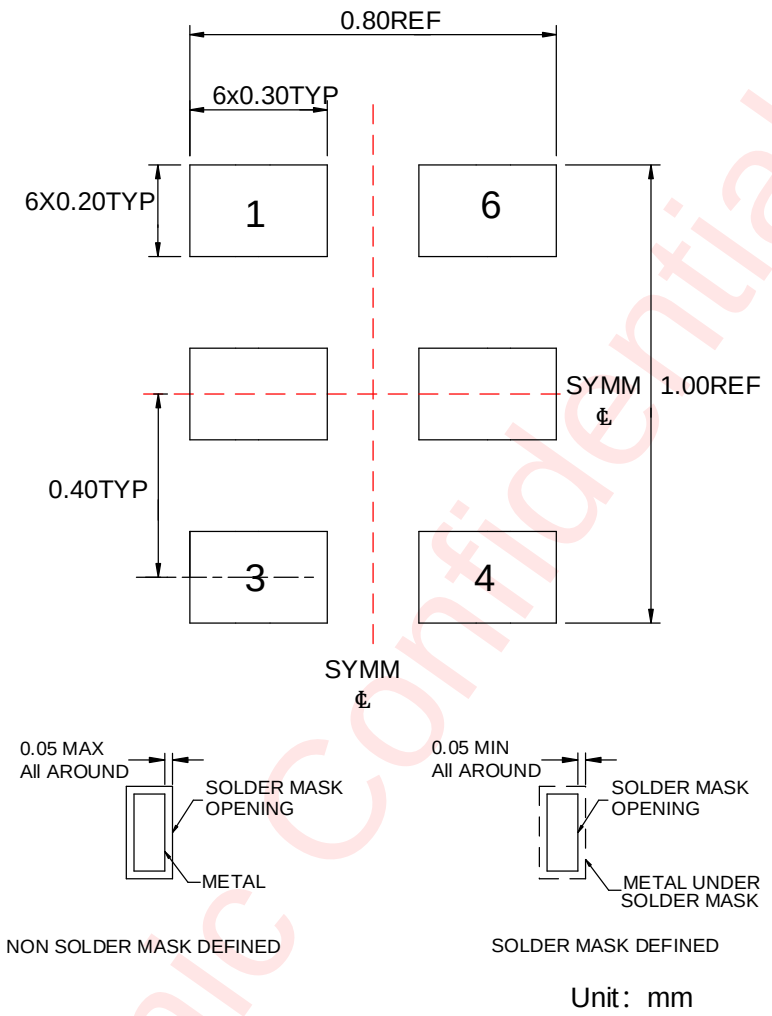

Figure 5 Land Pattern

Awinic Confidential

 © 2025 Shanghai Awinic Technology Co., Ltd. All Rights Reserved

TAPE & REEL DESCRIPTION

REEL DIMENSIONS

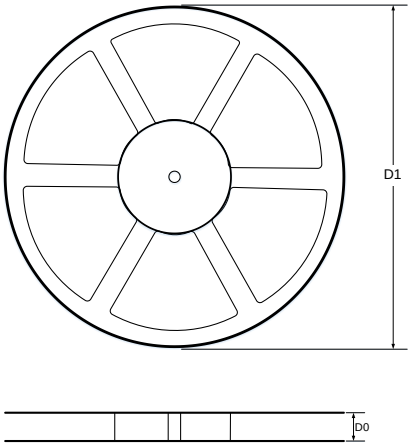

TAPE DIMENSIONS

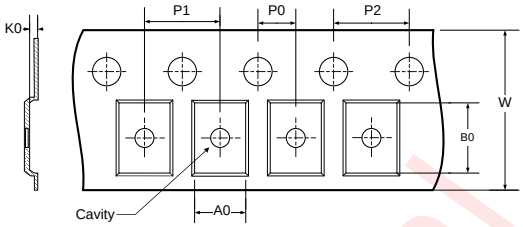

A0：Dimension designed to accommodate the component width
B0：Dimension designed to accommodate the component length
K0：Dimension designed to accommodate the component thickness
W：Overall width of the carrier tape
P0：Pitch between successive cavity centers and sprocket hole
P1：Pitch between successive cavity centers
P2：Pitch between sprocket hole
D1：Reel Diameter
D0：Reel Width

QUADRANT ASSIGNMENTS FOR PIN 1 ORIENTATION IN TAPE

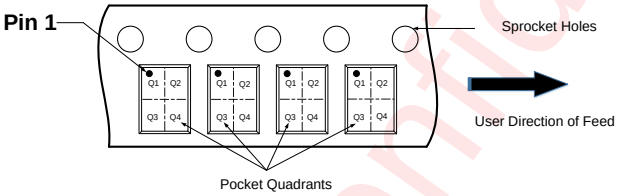

Note：The above picture is for reference only. Please refer to the value in the table below for the actual size

DIMENSIONS AND PIN1 ORIENTATION

D1 (mm)	D0 (mm)	A0 (mm)	B0 (mm)	K0 (mm)	P0 (mm)	P1 (mm)	P2 (mm)	W (mm)	Pin1 Quadrant
178	9.5	0.8	1.2	0.55	2	2	4	8	Q1

All dimensions are nominal

Figure 6 Tape & Reel Description

Awinic Confidential

 © 2025 Shanghai Awinic Technology Co., Ltd. All Rights Reserved

REVISION HISTORY

Version	Date	Change Record
V1.0	Feb.2025	Officially Reversion
V1.1	Apr.2025	Update spec of control voltage low

Awinic Confidential

 © 2025 Shanghai Awinic Technology Co., Ltd. All Rights Reserved

DISCLAIMER

All trademarks are the property of their respective owners. Information in this document is believed to be accurate and reliable. However, Shanghai AWINIC Technology Co., Ltd (AWINIC Technology) does not give any representations or warranties, expressed or implied, as to the accuracy or completeness of such information and shall have no liability for the consequences of use of such information.

AWINIC Technology reserves the right to make changes to information published in this document, including without limitation specifications and product descriptions, at any time and without notice. Customers shall obtain the latest relevant information before placing orders and shall verify that such information is current and complete. This document supersedes and replaces all information supplied prior to the publication hereof.

AWINIC Technology products are not designed, authorized or warranted to be suitable for use in medical, military, aircraft, space or life support equipment, nor in applications where failure or malfunction of an AWINIC Technology product can reasonably be expected to result in personal injury, death or severe property or environmental damage. AWINIC Technology accepts no liability for inclusion and/or use of AWINIC Technology products in such equipment or applications and therefore such inclusion and/or use is at the customer's own risk.

Applications that are described herein for any of these products are for illustrative purposes only. AWINIC Technology makes no representation or warranty that such applications will be suitable for the specified use without further testing or modification.

All products are sold subject to the general terms and conditions of commercial sale supplied at the time of order acknowledgement.

Nothing in this document may be interpreted or construed as an offer to sell products that is open for acceptance or the grant, conveyance or implication of any license under any copyrights, patents or other industrial or intellectual property rights.

Reproduction of AWINIC information in AWINIC data books or data sheets is permissible only if reproduction is without alteration and is accompanied by all associated warranties, conditions, limitations, and notices. AWINIC is not responsible or liable for such altered documentation. Information of third parties may be subject to additional restrictions.

Resale of AWINIC components or services with statements different from or beyond the parameters stated by AWINIC for that component or service voids all express and any implied warranties for the associated AWINIC component or service and is an unfair and deceptive business practice. AWINIC is not responsible or liable for any such statements.

Awinic Confidential

 © 2025 Shanghai Awinic Technology Co., Ltd. All Rights Reserved