REVISIONS					
REV.	ECN NO.	LOCATION	DESCRIPTION	DATE	DESIGN
A1	N/A		图框升级整理图面	2024.08.07	阿 树

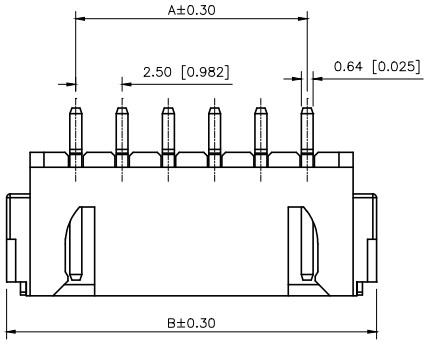

3P~16P Shape
SCALE 1:1

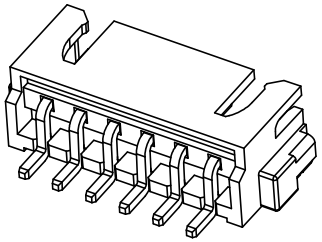

■SPECIFICATIONS
- •Voltage rating:250V AC/DC
- •Current rating:3A AC/DC
- •Withstanding Voltage:1000V AC/minute
- •Temperature range:−45°C+125°C
- •Insulation resistance:≥1000MΩ
- •Contact resistance:≤10mΩ
- •After environmental testing:≤20mΩ

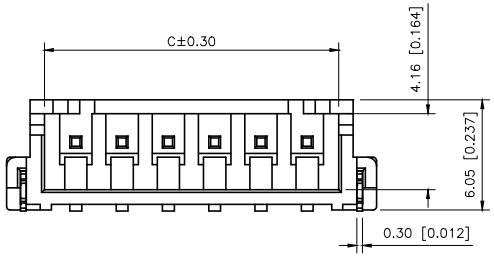

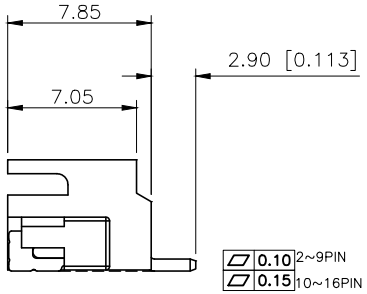

PART NO.:
X9357 W R S−03−9T SN
① ② ③ ④ ⑤ ⑥ ⑦

① Series No
② Category:W−Wafer
③ Welding Board Angle:R−Stright 90°
④ Welding Way:S−SMT
⑤ Row No−Pin No: XX−02P~16P
⑥ Material:9T−PA9T 94V−0
⑦ Planting Category:SN−Bright tin plating

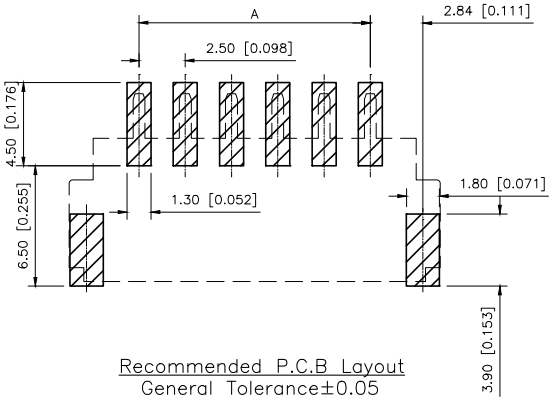

Recommended P.C.B Layout
General Tolerance±0.05

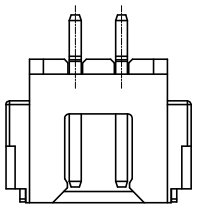

02P Shape
SCALE 1:1

Poles	Dimensions(mm)			Poles	Dimensions(mm)		
	A	B	C		A	B	C
02	2.50	10.00	5.90	10	22.50	30.00	25.90
03	5.00	12.50	8.40	11	25.00	32.50	28.40
04	7.50	15.00	10.90	12	27.50	35.00	30.90
05	10.00	17.50	13.40	13	30.00	37.50	33.40
06	12.50	20.00	15.90	14	32.50	40.00	35.90
07	15.00	22.50	18.40	15	35.00	42.50	38.40
08	17.50	25.00	20.90	16	37.50	45.00	40.90
09	20.00	27.50	23.40				

X8821WRS−03−9TSN	PA9T UL 94V−0	Brass	Tin−Plated	X8821H
PART NO	Material	Material(pin)	Finish(pin)	Suitable XKB Housing

ANGLAR	±5°
X.	±0.40
X.x	±0.30
X.xx	±0.20
X.xxx	±0.15
UNSPECIFIED TOLERANCES	

XKB INDUSTRIAL PRECISION CO.,LIMITED

DESIGN	阿 树	VIEW:	MODEL TYPE: 2.50 mm Crimp Style Connectors
CHECKED		UNIT: mm/in	PART NO.: X8821WRS−03−9TSN
APPROVED		SIZE: A4	DWG NO.: X−X8821WRS−03−9TSN

SCALE	PAGE	REVISION
N/A	1/1	A1