REVISIONS					
REV.	ECN NO.	LOCATION	DESCRIPTION	DATE	DESIGN
A0	N/A		INITIAL RELEASE	/	/
A1	N/A		图面升级整理图面	2025.05.22	阿树

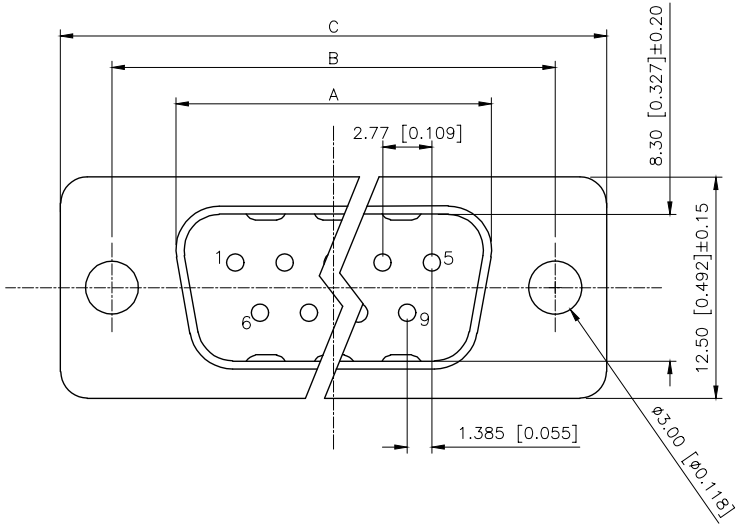

Specifications:
规格：
1.Voltage rating:250VAC/DC
额定电压：250V AC/DC
2.Current rating:3A AC/DC
额定电流：3A AC/DC
3.Withstanding voltage:500V AC/minute
耐受电压：500V AC/分钟
4.Temperature range: −55℃−+105℃
温度范围：−55℃−+105℃
5.Insulation resistance:1000MΩ MIN
绝缘电阻：1000MΩ MIN
6.Contact resistance:30mΩ Max
接触电阻：30mΩ Max
Materiai:
材料：
7.Rubber core:PBT UL94V−0
胶芯：PBT UL94V−0
8.The iron shell:SPCC−SD Nivkel Plating/Tin Plating/Gold Plating
铁壳：SPCC−SD,镀镍/镀锡/镀金
9.Terminal:Copper alloy
端子：铜合金

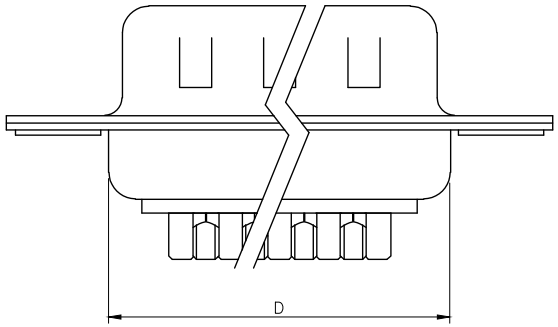

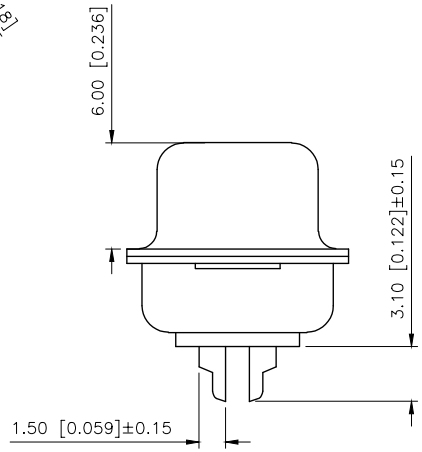

NUMBER OF POSITIONS	DIMENSION			
	A±0.25	B±0.13	C±0.38	D±0.25
9	18.00	24.99	30.80	19.28
15	26.50	33.32	39.20	27.51
25	40.00	47.04	53.05	41.28
37	56.60	63.50	69.40	57.71

铆合方式	TYPE-1:铆合	TYPE-2:前铆实心螺母	TYPE-3:后铆空心螺母	TYPE-4:后铆空心螺母锁螺丝
图示	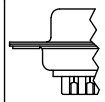	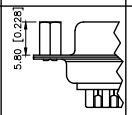	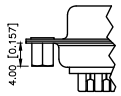	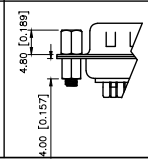

AuGLAR	±5°
X.	±0.40
X.x	±0.30
X.xx	±0.20
X.xxx	±0.15
UNSPECIFIED TOLERAuCES	

XKB 星坤 Connection

DESIGN	阿树	VIEW:	MODEL TYPE: D-SUB
CHECKED		UNIT: mm/in	PART NO.: X0109WT7B1
APPROVED		SIZE: A4	DWG NO.: X-X0109WT7B1

XKB INDUSTRIAL PRECISION CO.,LIMITED

SCALE	PAGE	REVISION
N/A	1/1	A1

www.helloxkb.com www.helloxkb.cn www.xk-dg.cn