REVISIONS					
REV.	ECN NO.	LOCATION	DESCRIPTION	DATE	DESIGN
A0	N/A		INITIAL RELEASE	/	/
A1	N/A		图面升级整理图面	2025.06.24	阿树

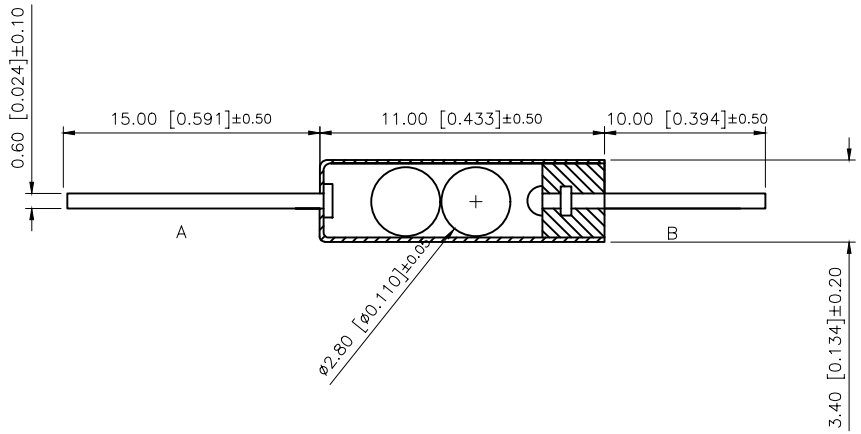

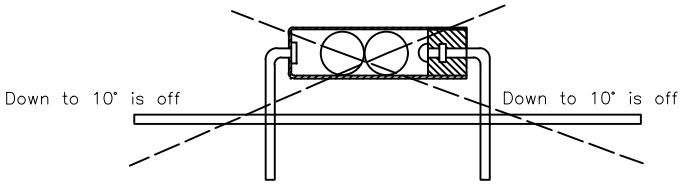

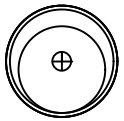

XKB Product features
产品特性
1. Sw-200d is a dual ball single direction tilt inductive trigger switch.
1.SW-200D为双滚珠型单方向倾斜感应触发开关。
2. When the guide end (no pin end) of the product is inclined and the inclination angle is greater than 10 degrees, the product is in open circuit, (off) state; when the product is horizontal and the inclination angle is greater than 10 degrees, the product is in closed circuit (On) state.XKB
2.当产品向导电端（无脚端）倾斜，倾斜角度大于10度角时，产品处于开路，（OFF）状态，当产品水平且倾斜角度大于10度角时，产品处于闭路。（ON）状态。
3. When it is placed horizontally, shaking is easy to trigger, but when there is no foot down, shaking is not easy to trigger.XKB
3.水平放置时，晃动可易触发，无脚端向下时，晃动不易触发。
4. The product of this specification is completely sealed, waterproof and dustproof.
4.本规格产品为完全密封装，可防水，防尘。
5. Under normal conditions, the service life of the switch can reach 100000 times.
5.在正常情况下，开关寿命可达10万次。
6. This product is environmentally friendly.XKB
6.本产品采用环保金属材质制造，性能稳定。

ITEM	PAPT NAMF	QTY	MATERIAL	FINISHING
⑦	Hot melt adhesive	1	PET	Grey
⑥	Plug	1	PC	
⑤	Ball	1	Brass	SC
④	Ball	1	Brass	SC&GP2U
③	Pin A	1	Brass	SILVERING
②	Pin B	1	Brass	GP 2U
①	Copper Pipe	1	Brass	SC&GP2U

Voltage: < 5V
Current: < 20mA
Conduction time: 2ms
Closed circuit resistance: < 10m ohm
Open circuit resistance: > 20m ohm
High temperature resistance: 120 ℃ /260 ℃
Terminal tension: 1000gf / min
Humidity: 25~95%RH
Working lifespan:20,000 cycles
Error rate:1%

AuGLAR	±5°
X.	±0.40
X.x	±0.30
X.xx	±0.20
X.xxx	±0.15
UNSPECIFIED TOLERAuCES	

XKB 星坤 Connection

DESIGN	阿树	VIEW:	MODEL TYPE: Vibration switch
CHECKED		UNIT: mm/in	PART NO.: SW-200D-15T10G3
APPROVED		SIZE: A4	DWG NO.: X-SW-200D-15T10G3

XKB INDUSTRIAL PRECISION CO.,LIMITED

SCALE	PAGE	REVISION
N/A	1/1	A1

www.helloxkb.com www.helloxkb.cn www.xk-dg.cn