| REVISIONS | | | | | |
|---|---|---|---|---|---|
| REV. | ECN NO. | LOCATION | DESCRIPTION | DATE | DESIGN |
| A1 | N/A | | | 2025.07.01 | |
| A2 | N/A | A2 X10 | | 2025.10.10 | |

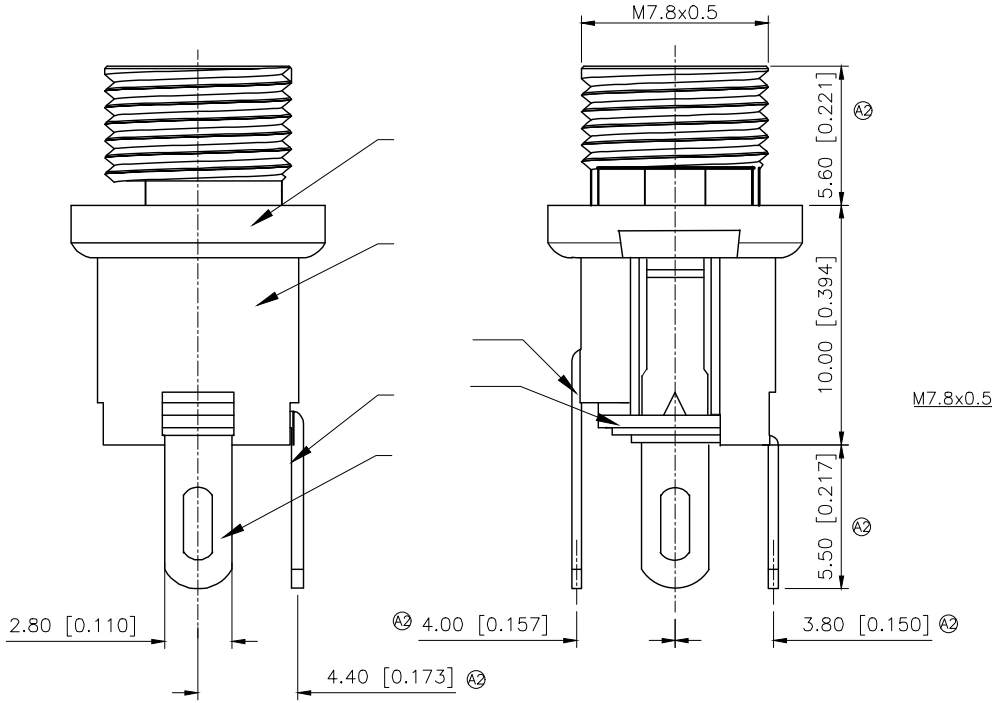


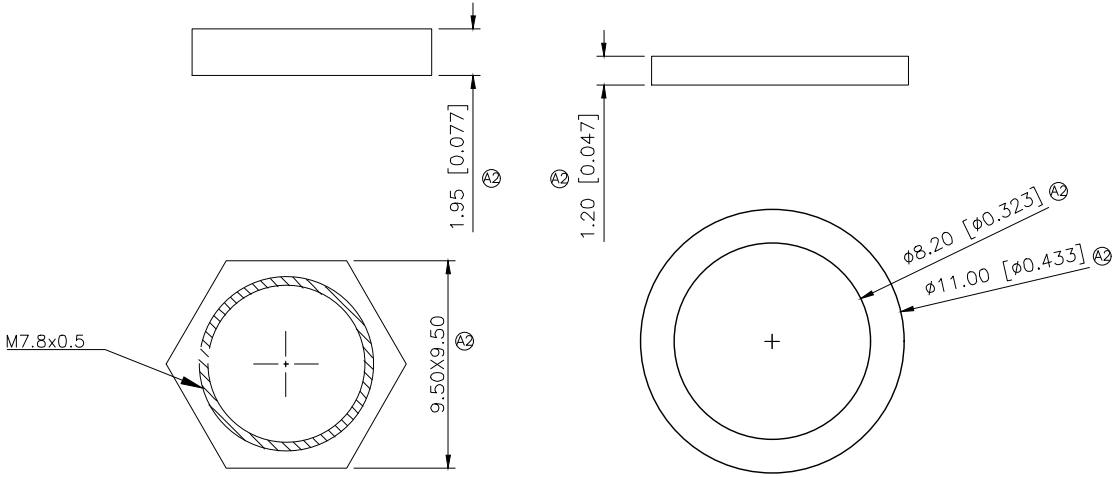


Specifications( )
1.Voltage rating( ):DC 24V
2.Current rating( ):3A AC/DC
3.Withstanding voltage( ): ≥ 500V AC/minute
4.Insulation resistance( ): ≥ 100MΩ Min
5.Contact resistance( ):≤30mΩ Max
6.Mating cycles 5000 cycles Min
7.Insertion and extraction force 3~20N
8.Temperature range( ):−30 ~+70

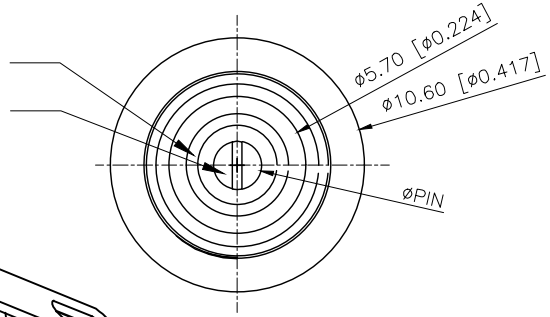


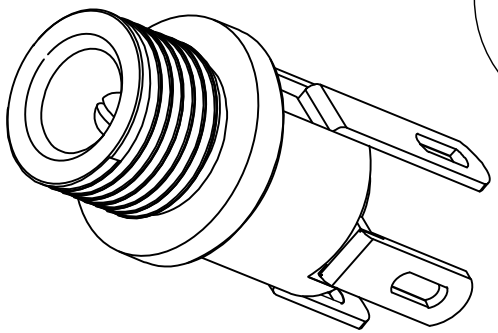

| | |
|---|---|
| SCHEMATIC | 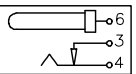 |
| Model | DC−025M |
| Center Pin | Ø2.0 mm |
| | Ø2.5 mm |

| NO | NAME | QTY | MATERIAL | PLATING |
|---|---|---|---|---|
| 8 | PIN | 1 | H62 Brass | Tin−Plating |
| 7 | Small gasket | 1 | Phenolic board t=0.6mm | |
| 6 | Plain | 1 | H62 Brass t=0.4mm | Tin−Plating |
| 5 | Big gasket | 1 | Phenolic board t=0.8mm | |
| 4 | Reeds | 1 | Tin bronze t=0.5mm | Tin−Plating |
| 3 | Bent piece | 1 | Phosphor bronze t=0.4mm | Tin−Plating |
| 2 | Pedestal | 1 | PBT | Black |
| 1 | Bushing | 1 | H62 Brass | Tin−Plating |

| AuGLAR | ±5° |
|---|---|
| X. | ±0.40 |
| X.x | ±0.30 |
| X.xx | ±0.20 |
| X.xxx | ±0.15 |
| UNSPECIFIED TOLERAuCES | |

XKB Connection 星坤

| | | | |
|---|---|---|---|
| DESIGN | | VIEW: | MODEL TYPE: DC POWER JACK |
| CHECKED | | UNIT: mm/in | PART NO.: DC−025M−5A−2.5 |
| APPROVED | | SIZE: A4 | DWG NO.: |

XKB INDUSTRIAL PRECISION CO.,LIMITED

| SCALE | PAGE | REVISION |
|---|---|---|
| N/A | 1/1 | A2 |

www.helloxkb.com www.helloxkb.cn www.xk−dg.cn