REVISIONS					
REV.	ECN NO.	LOCATION	DESCRIPTION	DATE	DESIGN
A0	N/A		INITIAL RELEASE	/	/
A1	N/A			2024.11.21	

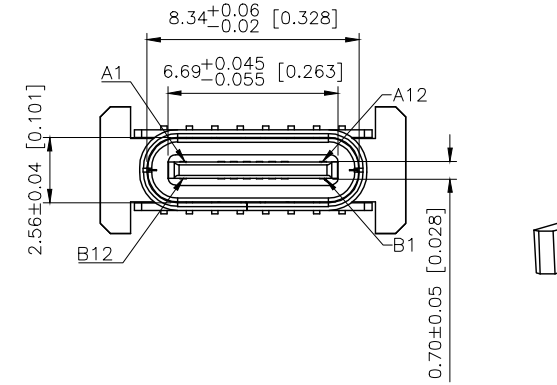

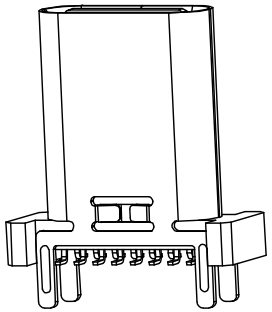

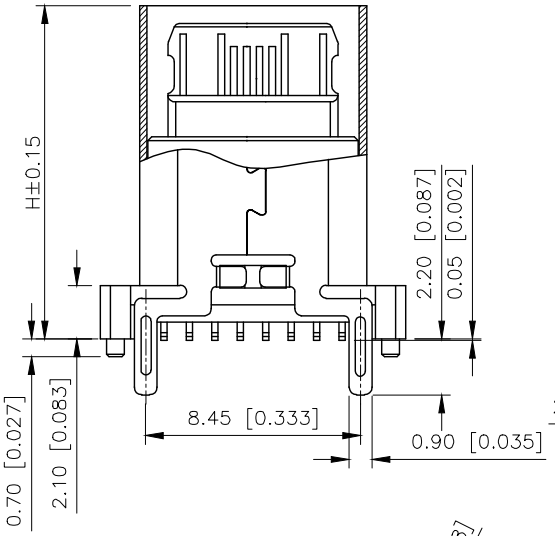

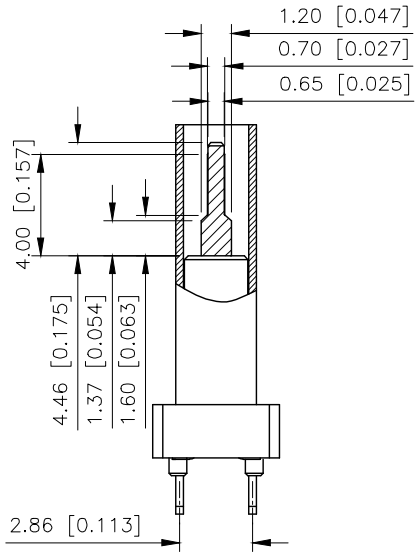

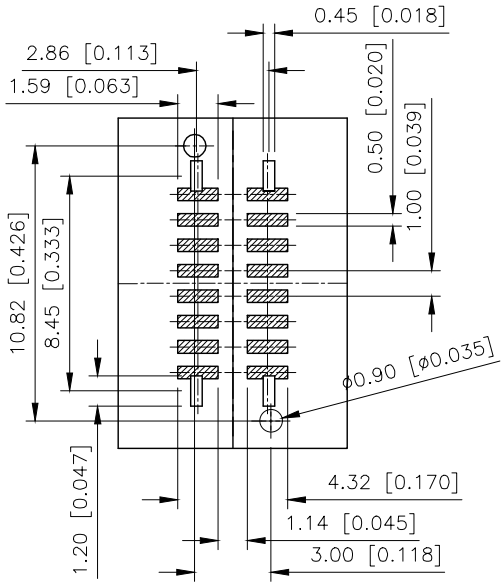

RECOMMEND P.C.B LAYOUT (T:1.00mm)

TOLERANCE TOLERANCE ±0.05mm

:

:Electrical

1. Rated current:5.0A
2. Contact impedance:40 MILLIOHMS MAX
3. Withstand voltage:150V AC /1 mA MAX
4. Insulation impedance: 150V DC/100 MEGA OHMS MIN

Mechanical property:

1. Insertion force:5~20N
2. Pull output:8~20N
3. Service life:10000 5N MIN

:MATERIAL

1. plastic:LCP/PA9T UL94V-0
2. terminal:C7025/C1814 T=0.15MM
3. shell:SUS304 T=0.30MM
4. hook:SUS304 T=0.15MM

:FINISH

1. terminal: 3U"MIN

PIN 1U"MIN.

2. shell: 50U"MIN(48H)

: 95%

SMT (260°C±5°C)

( )

Operating temperature:-40°C~+85°C

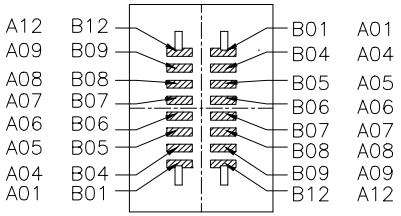

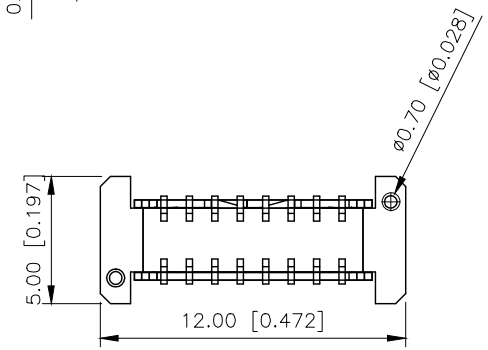

U263-162N-4BQC12-4

- 1:AU 1U"
- 2:AU 3U"
- 3:AU 15U"
- 4:AU 30U"

- 1:PBT
- 2:PA6T
- 3:PA9T
- 4:LCP

- W:WHITE
- B:BLACK

- 1.H=8.80
- 2.H=9.30
- 3.H=10.00
- 4.H=10.50
- 5.H=12.40
- 6.H=13.10
- 7.H=13.70
- 8.H=15.00

PIN	SIGNAL NAME	PIN	SIGNAL NAME
A1	GND	B12	GND
A4	VBUS	B9	VBUS
A5	CC1	B8	SBU2
A6	DP1	B7	DN2
A7	DN1	B6	DP2
A8	SBU1	B5	CC2
A9	VBUS	B4	VBUS
A12	GND	B1	GND

AuGLAR	±5°
X.	±0.40
X.x	±0.30
X.xx	±0.20
X.xxx	±0.15
UNSPECIFIED TOLERAuCES	

XKB Connection

DESIGN		VIEW:	MODEL TYPE: USB TYPE C -16PIN PLUG
CHECKED		UNIT: mm/in	PART NO.: U263-162N-4BQC12-4
APPROVED		SIZE: A4	DWG NO.:

XKB INDUSTRIAL PRECISION CO.,LIMITED

SCALE	PAGE	REVISION
N/A	1/1	A1