REVISIONS					
REV.	ECN NO.	LOCATION	DESCRIPTION	DATE	DESIGN
A0	N/A		INITIAL RELEASE	/	/
A1	N/A		图面升级整理图面	2024.12.25	阿树

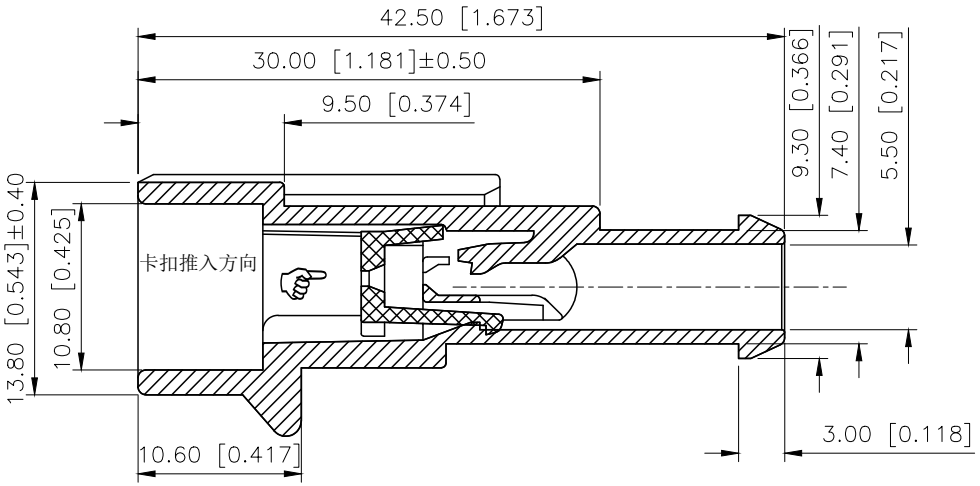

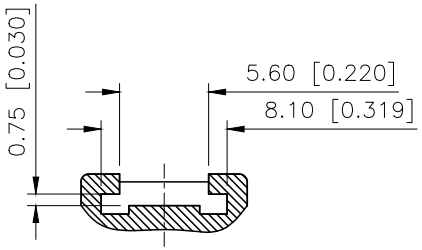

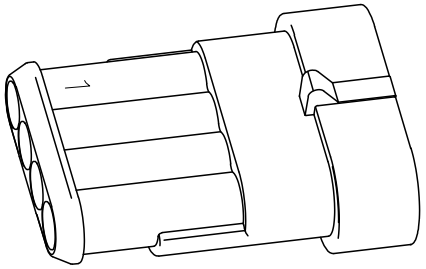

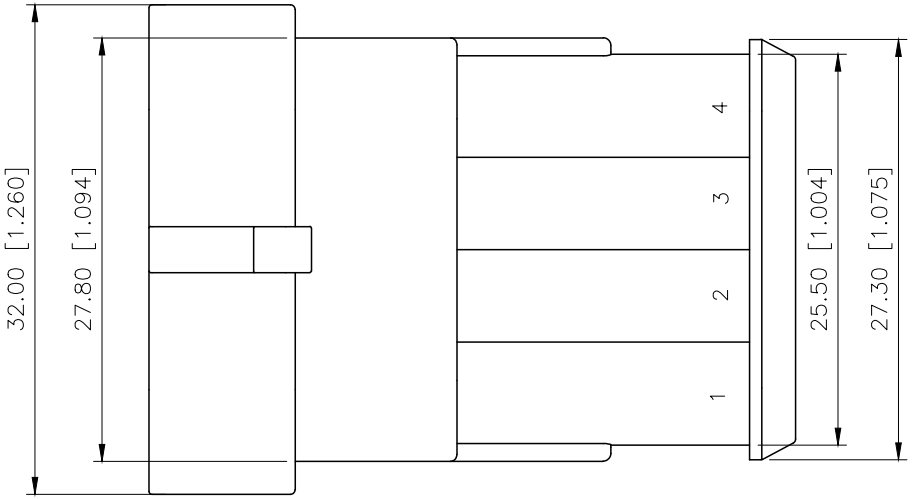

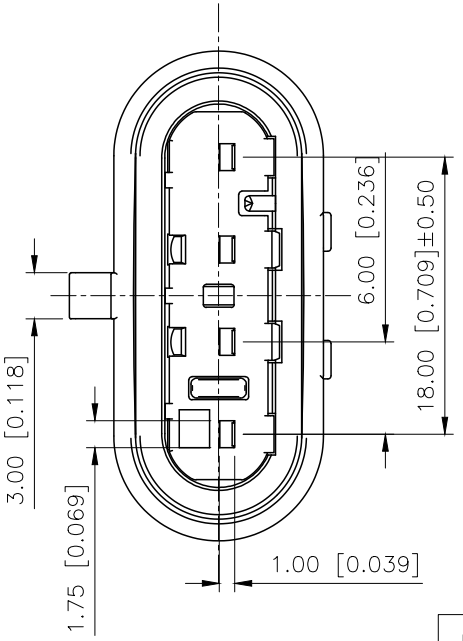

Technical Notes
1.It shows that it is smooth and clean, and there are no obvious shrinkage pits and weld marks
2.Current rating:14A AC/DC
3.Temperature range:−40℃−+125℃

PART NO.:

K 282103 H F−04−N0
① ② ③ ④ ⑤ ⑥

①K:XKBTEK−Car Connector
②XKB Series No
③Category:H−Housing
④Special No:F−Female Housing
⑤Row No.Pin No:04 Pin
⑥Material:N0−PA66 UL94V−0

K282103HF−XX−N0	PA66	K282103HM	K282103TM
PART N0	Material	Suitable XKB Female	Suitable XKB Terminal

AuGLAR	±5°
X.	±0.40
X.x	±0.30
X.xx	±0.20
X.xxx	±0.15
UNSPECIFIED TOLERAuCES	

XKB Connection 星创

DESIGN	阿树	VIEW:	MODEL TYPE: 6.0mm Automobile connector
CHECKED		UNIT: mm/in	PART NO.: K282103HF−04−N0
APPROVED		SIZE: A4	DWG NO.:

XKB INDUSTRIAL PRECISION CO.,LIMITED

SCALE	PAGE	REVISION
N/A	1/1	A1