Data Sheet

SCR2100-D08
Single Axis Gyroscope with Digital SPI Interface

Features

- ±125°/s X-axis angular rate measurement range
- −40°C…+125°C operating range
- 3.0V…3.6V supply voltage
- SPI digital interface
- Extensive self diagnostics features
- Size 15.0 x 8.5 x 4.3 mm (l × w × h)
- RoHS compliant robust SOIC plastic package suitable for lead free soldering process and SMD mounting
- Proven capacitive 3D-MEMS technology

Applications

SCR2100-D08 is targeted at applications demanding high stability with tough environmental requirements. Typical applications include:

- Inertial Measurement Units (IMUs) for highly demanding environments
- Platform stabilization and control
- Motion analysis and control
- Roll over detection
- Robotic control systems
- Machine control systems
- Navigation systems

Overview

The SCR2100-D08 is a combined high performance angular rate sensor component. Angular rate sensor is based on Murata's proven capacitive 3D-MEMS technology. Signal processing is done in mixed signal ASIC that provides angular rate output via flexible SPI digital interface. Sensor elements and ASIC are packaged to 24 pin premolded plastic housing that guarantees reliable operation over product's lifetime.

The SCR2100-D08 is designed, manufactured and tested for high stability, reliability and quality requirements. The component has extremely stable output over wide range of temperature, humidity and vibration. The component has several advanced self diagnostics features, is suitable for SMD mounting and is compatible with RoHS and ELV directives.

Downloaded from Arrow.com.

TABLE OF CONTENTS

1 Introduction 4

2 Specifications 4

2.1 General Specifications 4

2.2 Performance Specifications for Gyroscope 5

2.3 Performance Specification for Temperature Sensor 6

2.4 Absolute Maximum Ratings 6

2.5 Pin Description 7

2.6 Typical performance characteristics 9

2.6.1 Gyro typical performance characteristics 9

2.7 Digital I/O Specification 12

2.8 SPI AC Characteristics 13

2.9 Measurement Axis and Directions 14

2.10 Package Characteristics 14

2.10.1 Package Outline Drawing 14

2.11 PCB Footprint 15

2.12 Abbreviations 15

3 General Product Description 16

3.1 Factory Calibration 17

4 Component Operation, Reset and Power Up 18

4.1 Component Operation 18

4.2 Reset and Power Up Sequence For Enabling Internal Failsafe Diagnostics 19

5 Component Interfacing 20

5.1 SPI Interface 20

5.1.1 General 20

5.1.2 Protocol 20

5.1.3 General Instruction format 21

5.1.4 Operations 22

5.1.5 Return Status 22

5.1.6 Checksum (CRC) 23

5.1.7 Recommendation for the SPI interface implementation 24

6 Register Definition 25

6.1 Sensor Data Block 25

6.1.1 Example of Angular Rate Data Conversion 25

6.1.2 Example of Temperature Data Conversion 25

6.2 Sensor Status Block 26

6.2.1 RATE Status 1 Register (09h) 27

6.2.2 RATE Status 2 Register (0Ah) 27

6.2.3 ACC Status Register (0Fh) 28

6.2.4 Reset Control Register (16h) 28

6.2.5 Serial ID0 and Serial ID1 Registers (18h and 19h) 29

Downloaded from Arrow.com.

6.2.6 Common Status Register (1Bh) 30
6.2.7 Identification Register (1Dh) 31
6.2.8 Status Summary Register (1Fh) 31
7 Application information 32
7.1 Application Circuitry and External Component Characteristics 32
7.2 Assembly Instructions 33
8 Order information 34

Downloaded from Arrow.com.

1 Introduction

This document contains essential technical information about the SCR2100-D08 sensor including specifications, SPI interface descriptions, user accessible register details, electrical properties and application information. This document should be used as a reference when designing in SCR2100-D08 component.

2 Specifications

2.1 General Specifications

General specifications for SCR2100-D08 component are presented in Table 1. All analog voltages are related to the potential at AVSS and all digital voltages are related to the potential at DVSS.

Table 1. General specifications.

Parameter	Condition	Min	Typ	Max	Units
Analog supply voltage: AVDD		3.0	3.3	3.6	V
Analog supply current: I_AVDD	Temperature range -40 ... +125 °C		13.9		mA
Digital supply voltage: DVDD		3.0	3.3	3.6	V
Digital supply current: I_DVDD	Temperature range -40 ... +125 °C		3.3		mA
Boost supply current: I_L1 (current through inductor L1, see Figure 22)	Mean value Peak value, T < 1µs Max. value during startup (T≤0.4ms)		6.7	11.5 110 60	mA mA mA
Total current, I_TOTAL	I_AVDD + I_DVDD + I_L1		23.9	31.5	mA
Total current reset	Total average current during reset			5	mA
Rise/fall time: AVDD, DVDD, Vin_BOOST (see Figure 22)				200	ms

Downloaded from Arrow.com.

2.2 Performance Specifications for Gyroscope

Table 2. Gyro performance specifications (DVDD=AVDD=3.3V, ambient temperature and ODR=2.3kHz unless otherwise specified).

Parameter	Condition	Min	Typ	Max	Units
Operating range	Measurement axis X	-125		125	°/s
Offset (zero rate output)			0		LSB
Offset error (A		-1		1	°/s
Offset temperature drift (B	-40°C ... +125°C	-0.8		0.8	°/s
Offset short term bias stability			1		°/h
Angular random walk			0.23		$°/\sqrt{h}$
Sensitivity			50		LSB/(°/s)
Sensitivity error (C	-40°C ... +125°C	-2.5		2.5	%
Linearity error (D			±0.5		°/s
Integrated noise (RMS)	60Hz filter		0.05		$°/s_{RMS}$
Noise density			0.005		$(°/s)/\sqrt{Hz}$
Cross axis sensitivity (E		-1.5		1.5	%
G-sensitivity		-0.1		0.1	(°/s)/g
Shock sensitivity	50g, 6ms			2.0	°/s
Shock recovery				50	ms
Amplitude response	10Hz filter, -3dB frequency 60Hz filter, -3dB frequency		10 60		Hz Hz
Power on start-up time	10Hz filter 60Hz filter			750 620	ms ms
Recommended ODR (F			2300		Hz

Min/Max values are validation ±3 sigma variation limits from test population. Typical values are not guaranteed.

A) Includes offset calibration error and drift over lifetime.

B) Deviation from value at ambient temperature.

C) Includes calibration error, deviation from room temperature value and drift over lifetime.

D) Straight line through specified measurement range end points.

E) Cross axis sensitivity is the maximum sensitivity in the plane perpendicular to the measuring direction:

Cross axis for Y axis = Sensitivity Y / Sensitivity X

Cross axis for Z axis = Sensitivity Z / Sensitivity X

F) ODR = Output Data Rate, see section 5.1.7 for more details.

Downloaded from Arrow.com.

2.3 Performance Specification for Temperature Sensor

Table 3. Temperature sensor performance specifications.

Parameter	Condition	Min.	Typ	Max.	Unit
Temperature signal range		-50		+150	°C
Temperature signal sensitivity	Temperature sensor output in 2's complement format		14.7		LSB/°C

Temperature is converted to °C with following equation:

$$\text{Temperature } [°C] = 60 + (TEMP / 14.7),$$

where TEMP is temperature sensor output register content in decimal format.

2.4 Absolute Maximum Ratings

Within the maximum ratings (Table 4), no damage to the component shall occur. Parametric values may deviate from specification, yet no functional deviation shall occur. All analog voltages are related to the potential at AVSS, all digital voltages are related to DVSS.

Table 4. Absolute maximum ratings.

Parameter	Remark	Min.	Typ	Max.	Unit
AVDD	Supply voltage analog circuitry	-0.3		4.3	V
DVDD	Supply voltage digital circuitry	-0.3		4.3	V
DIN/DOUT	Maximum voltage at digital input and output pins	-0.3		DVDD+0.3	V
VBoost, LBoost	Maximum voltage at high voltage input and output pins	-0.3		40	V
Topr	Operating temperature range	-40		125	°C
Tstg	Storage temperature range	-40		150	°C
ESD_HBM	ESD according Human Body Model (HBM), Q100-002	±2000			V
ESD_MM	ESD according Machine Model (MM), Q100-003	±200			V
ESD_CDM	ESD according Charged Device Model (CDM), Q100-011	±500 ±750 (corner pins)			V
US	Ultrasonic agitation (cleaning, welding, etc)	Prohibited			

Downloaded from Arrow.com.

2.5 Pin Description

The pinout for SCR2100-D08 is presented in Figure 1, while the pin descriptions can be found in Table 5.

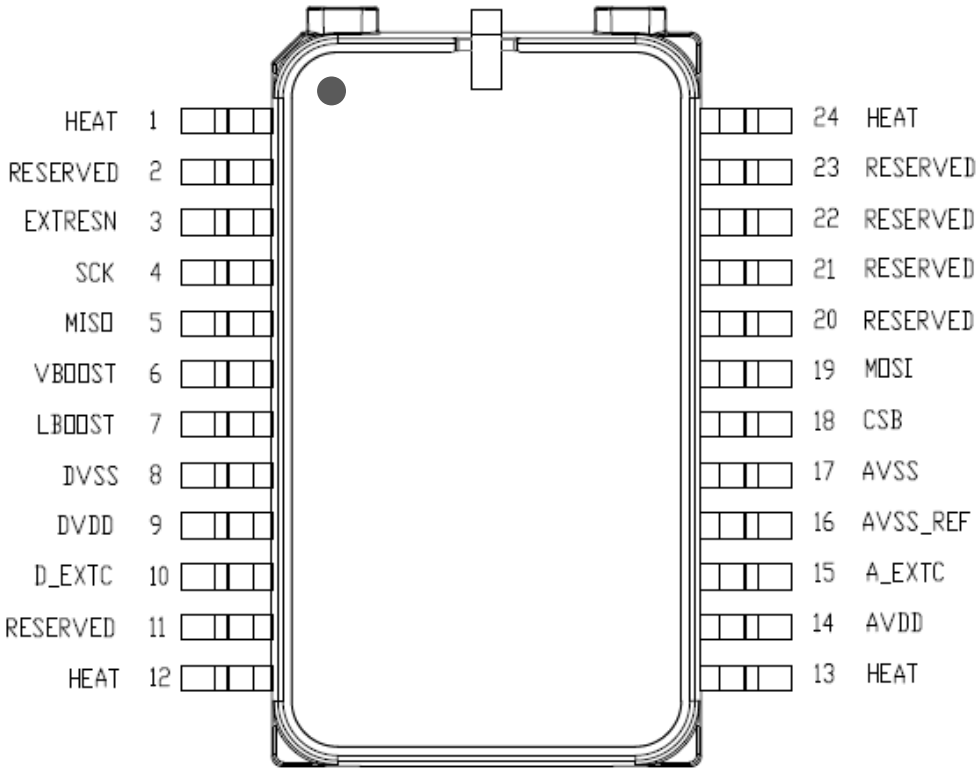

Figure 1. Pinout for SCR2100-D08.

Downloaded from Arrow.com.

Table 5. SCR2100-D08 pin descriptions.

Pin#	Name	Type	Description
1, 12, 13, 24	HEAT	-	Heat sink connection, connect externally to AVSS
2, 11	RESERVED	-	Factory use only, leave floating
3	EXTRESN	DIN	External Reset, 3.3V logic compatible Schmitt-trigger input with internal pull-up, LOW-HIGH transition causes system restart. Minimum low time 100us
4	SCK	DIN	CLK signal of SPI Interface
5	MISO	DOUT	Data Out of SPI Interface
6	VBOOST	AOUT_HV	External capacitor connection for high voltage analog supply, high voltage pad ≈30V
7	LBOOST	AIN_HV	Connection for inductor for high voltage generation, high voltage pad ≈30V
8	DVSS	GND	Digital Supply Return, connect externally to AVSS
9	DVDD	SUPPLY	Digital Supply Voltage
10	D_EXTC	AOUT	External capacitor connection for digital core (typ. 1.8V)
11	RESERVED	-	Factory use only, leave floating
14	AVDD	SUPPLY	Analog Supply voltage
15	A_EXTC	AOUT	External capacitor connection for positive reference voltage
16	AVSS_REF	GND	Analog reference ground, connect externally to AVSS
17	AVSS	GND	Analog Supply Return, connect externally to DVSS
18	CSB	DIN	Chip Select of SPI Interface, 3.3V logic compatible Schmitt-trigger input
19	MOSI	DIN	Data In of SPI Interface, 3.3V logic compatible Schmitt-trigger input
20	RESERVED	-	Factory use only, leave floating or connect to GND
21	RESERVED	-	Factory use only, leave floating or connect to GND
22	RESERVED	-	Factory use only, leave floating
23	RESERVED	-	Factory use only, leave floating

Downloaded from Arrow.com.

2.6 Typical performance characteristics

2.6.1 Gyro typical performance characteristics

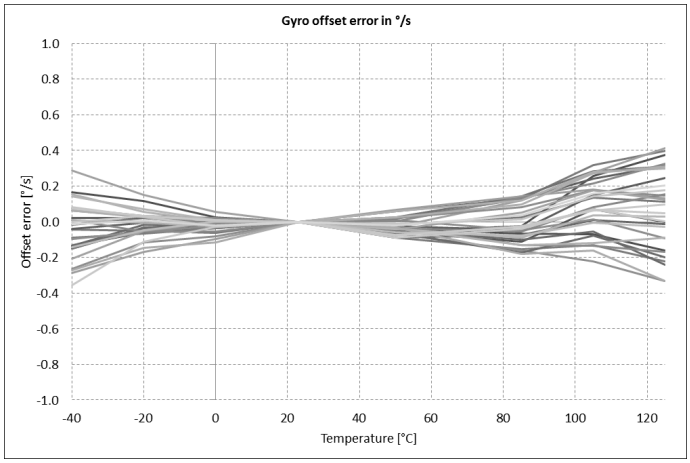

Figure 2. SCR2100-D08 gyro typical output temperature drift in °/s.

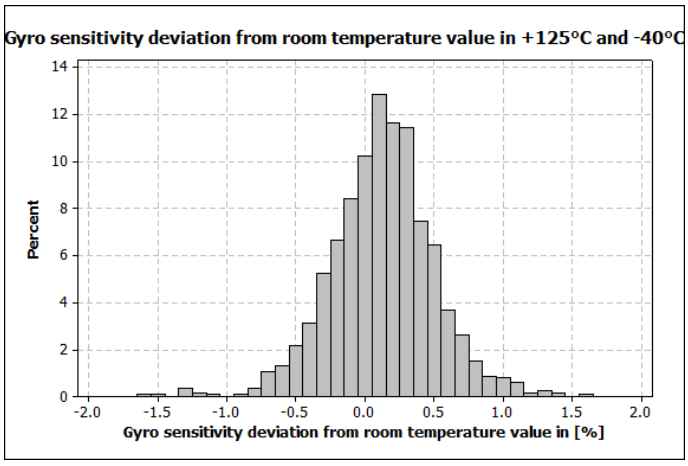

Figure 3. SCR2100-D08 gyro typical sensitivity deviation from room temperature value in %.

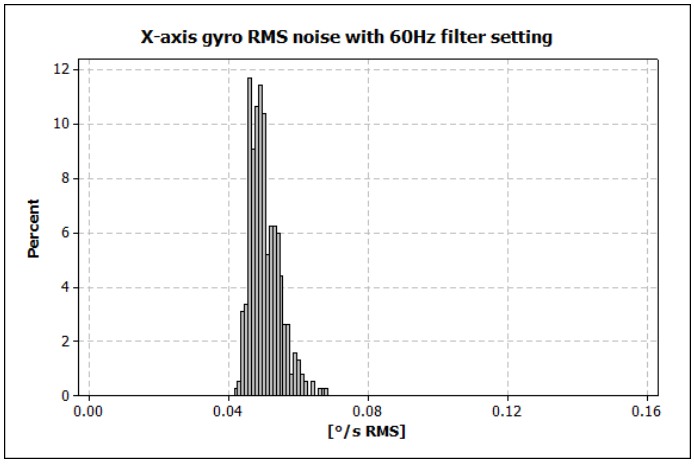

Figure 4. SCR2100-D08 gyro typical RMS noise in $°/s_{RMS}$.

Downloaded from Arrow.com.

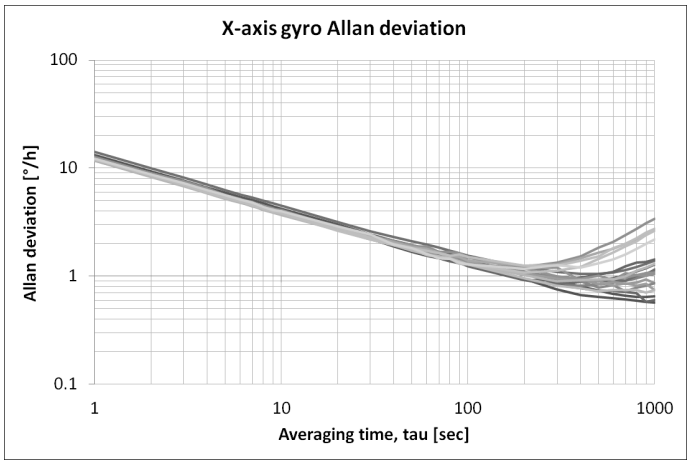

Figure 5. SCR2100-D08 gyro Allan deviation in °/h.

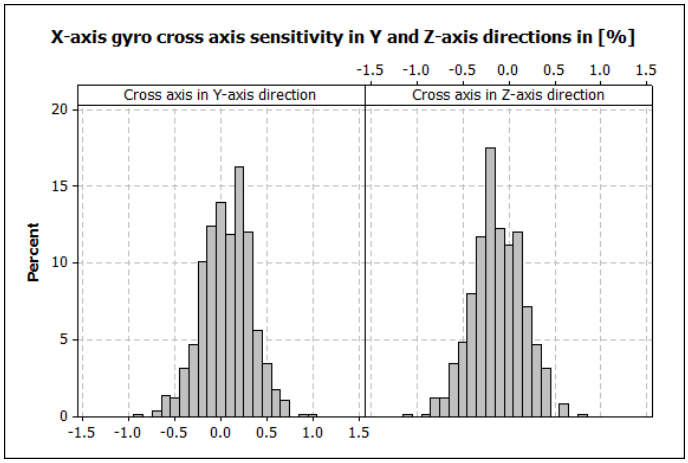

Figure 6. SCR2100-D08 gyro typical cross axis sensitivity in %.

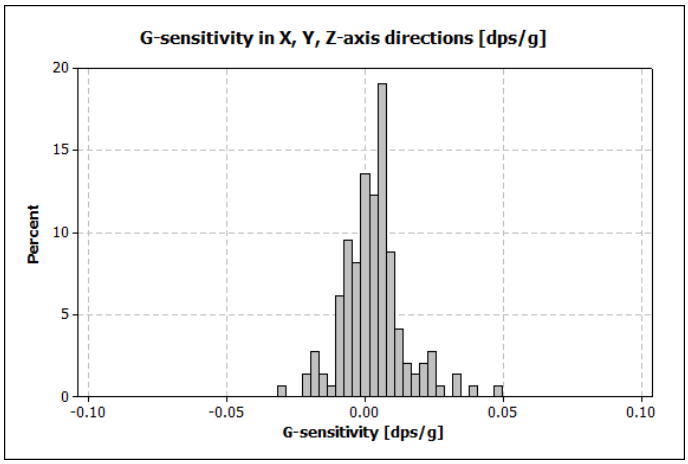

Figure 7. SCR2100-D08 gyro typical G-sensitivity in (°/s)/g.

Downloaded from Arrow.com.

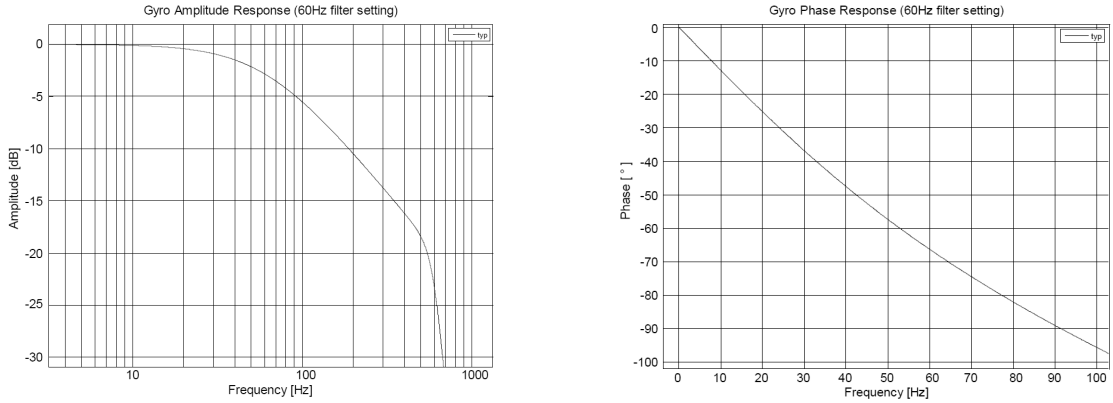

Figure 8. SCR2100-D08 gyro amplitude and phase response with 60Hz filter setting.

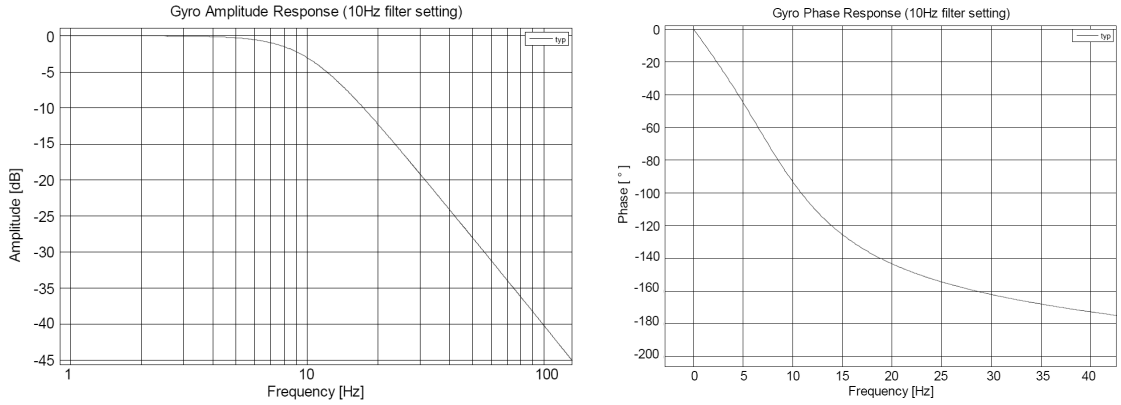

Figure 9. SCR2100-D08 gyro amplitude and phase response with 10Hz filter setting.

Downloaded from Arrow.com.

2.7 Digital I/O Specification

Table 6 describes the DC characteristics of SCR2100-D08 sensor SPI I/O pins. Supply voltage is 3.3 V unless otherwise specified. Current flowing into the circuit has a positive value.

Table 6. SPI DC characteristics.

Symbol	Description	Min.	Nom.	Max.	Unit
Serial Clock SCLK					
VinHigh	Input high voltage	2		DVDD+0.3	V
VinLow	Input low voltage	-0.3		0.8	V
Vhy	Input hysteresis	0.3			V
Ileak	Input leakage current, 0V ≤ Vin ≤ DVDD	-1		1	uA
Cin	Input capacitance			15	pF
Chip select CSB (Pull Up), low active					
VinHigh	Input high voltage	2		DVDD+0.3	V
VinLow	Input low voltage	-0.3		0.8	V
Vhy	Input hysteresis	0.3			V
Isource	Input current source (Pull Up), Vin = 0V	10		50	uA
Cin	Input capacitance			15	pF
Vin_open	Open circuit output voltage	2			V
Serial data input MOSI (Pull Down)					
VinHigh	Input high voltage	2		DVDD+0.3	V
VinLow	Input low voltage	-0.3		0.8	V
Vhy	Input hysteresis	0.3			V
Isource	Input current source (Pull Up), Vin = DVDD	10		50	uA
Cin	Input capacitance			15	pF
Vin_open	Open circuit output voltage			0.3	V
Serial data output MISO (Tri state)					
VoutHigh_-1mA	Output high voltage, Iout = -1mA	DVDD-0.5			V
VoutHigh_-50µA	Output high voltage, Iout = -50µA	DVDD-0.2			V
VinHigh_1mA	Output low voltage, Iout = +1mA			0.5	V
VinHigh_50µA	Output low voltage, Iout = +50µA			0.3	V
Iout_Hz	High impedance output current, 0V < VMISO < DVDD	-1		1	uA
Cld_miso	Capacitive load. The slope of the MISO output signal may need to be controlled to meet EMI requirements under specified load conditions.			200	pF

Downloaded from Arrow.com.

2.8 SPI AC Characteristics

The AC characteristics of SCR2100-D08 are defined in Figure 10 and Table 7.

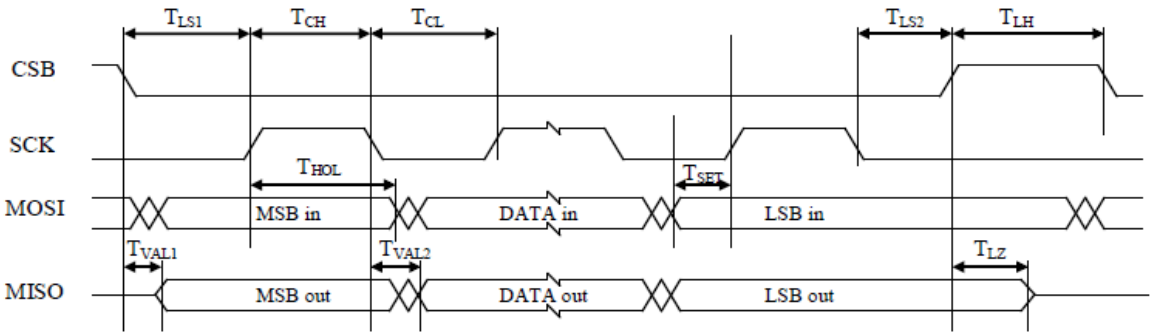

Figure 10. Timing diagram of SPI communication.

Table 7. SPI AC electrical characteristics.

Symbol	Description	Min.	Nom.	Max.	Unit
F_{SPI}	It is recommended to use maximum SCK frequency, see section 5.1.7 for more details.	0.1		8	MHz
T_{SPI}			$1/F_{SPI}$		
T_{CH}	High time: duration of logical high level at SCLK	45	$T_{SPI}/2$		ns
T_{CL}	Low time: duration of logical low level at SCLK	45	$T_{SPI}/2$		ns
T_{LS1}	Setup time CSB: time between the falling edge of CSB and the rising edge of SCLK	45	$T_{SPI}/2$		ns
T_{VAL1}	Delay time: time delay from the falling edge of CSB to data valid at MISO			30	ns
T_{SET}	Setup time at MOSI: setup time of MOSI before the rising edge of SCLK	15			ns
T_{HOL}	MOSI data hold time	8			ns
T_{VAL2}	Delay time: time delay from falling edge of SCLK to data valid at MISO			30	ns
T_{LS2}	Hold time of CSB: time between the falling edge of SCLK and the rising edge of CSB	45	$T_{SPI}/2$		ns
T_{LZ}	Tri-state delay time: time between the rising edge of CSB to MISO in Tri-state			15	ns
T_{LH}	Time between SPI cycles: minimum high time of CSB between two consecutive transfers	250			ns

Downloaded from Arrow.com.

2.9 Measurement Axis and Directions

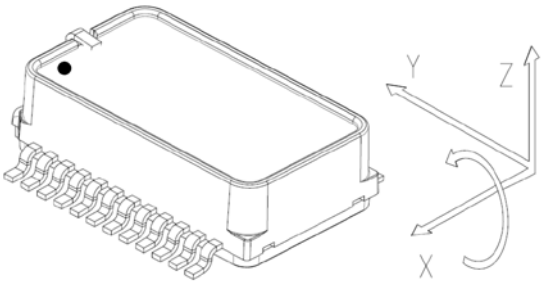

Figure 11. SCR2100-D08 measurement directions.

2.10 Package Characteristics

2.10.1 Package Outline Drawing

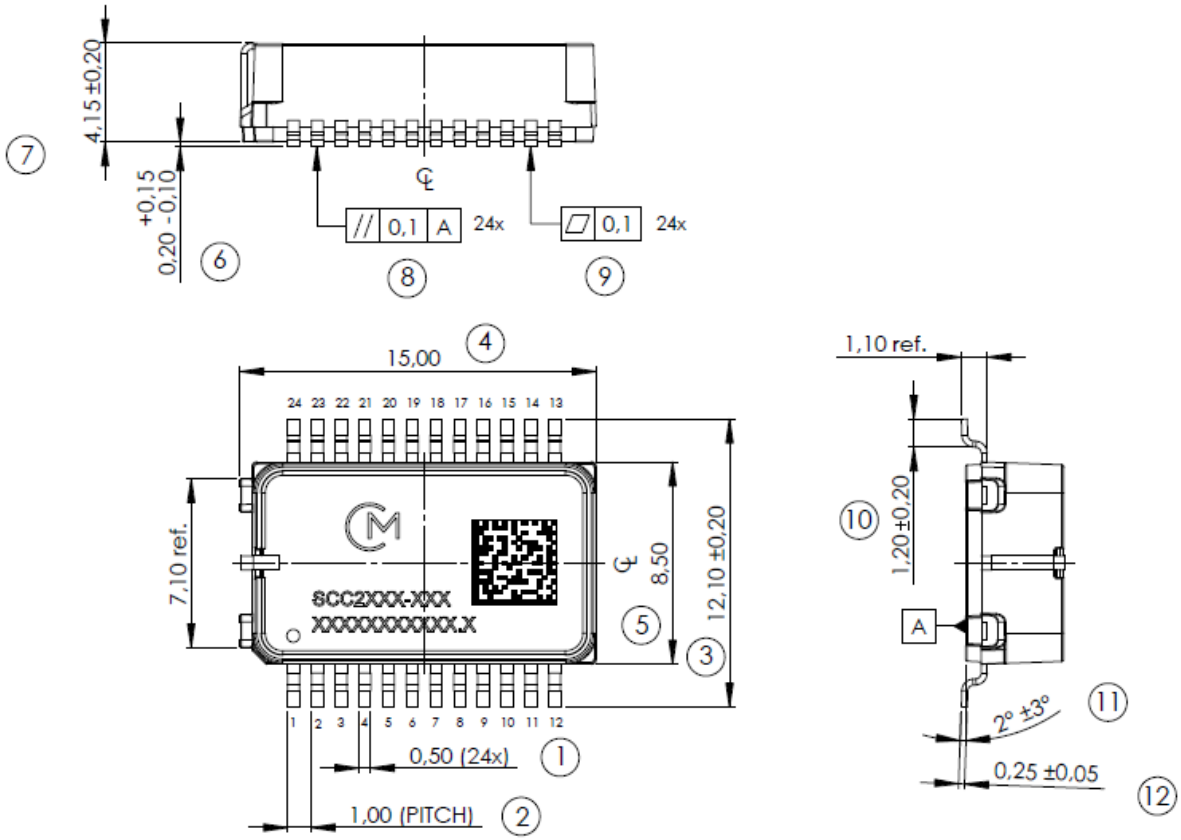

Figure 12. Package outline. The tolerances are according to ISO2768-f (see Table 8).

Table 8. Limits for linear measures (ISO2768-f).

Tolerance class	Limits in mm for nominal size in mm			
	0.5 to 3	Above 3 to 6	Above 6 to 30	Above 30 to 120
f (fine)	±0.05	±0.05	±0.1	±0.15

Downloaded from Arrow.com.

2.11 PCB Footprint

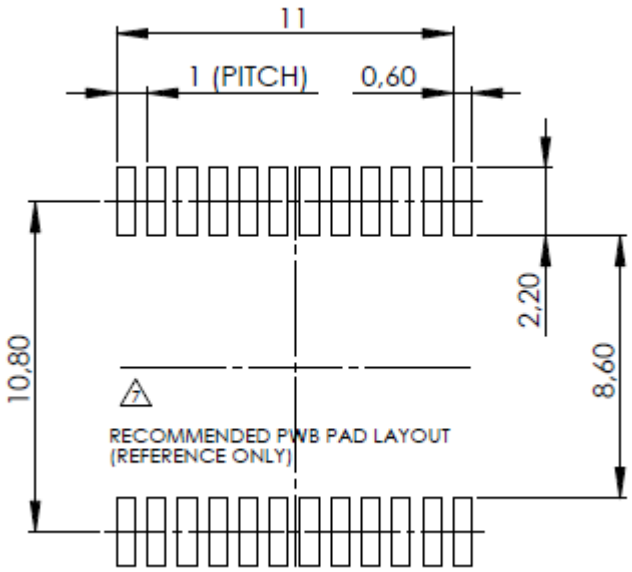

Figure 13. Recommended PWB pad layout for SCR2100-D08. The tolerances are according to ISO2768-f (see Table 8).

2.12 Abbreviations

ASIC	Application Specific Integrated Circuit
SPI	Serial Peripheral Interface
RT	Room Temperature
DPS	Degrees per second
FS	Full scale
CSB	Chip Select
SCK	Serial Clock
MOSI	Master Out Slave In
MISO	Master In Slave Out
MCU	Microcontroller

Downloaded from Arrow.com.

3 General Product Description

The SCR2100-D08 sensor consists of angular rate sensing element and Application-Specific Integrated Circuit (ASIC) used to sense and control the element. SCR2100-D08 utilizes the same ASIC as Murata's other high performance gyro accelerometer combo products (SCC2000 series). With SCR2100-D08 the ASIC's the accelerometer functionality is powered down. Figure 14 contains an upper level block diagram of the component. The ASIC provides SPI interface used to control and read the gyroscope.

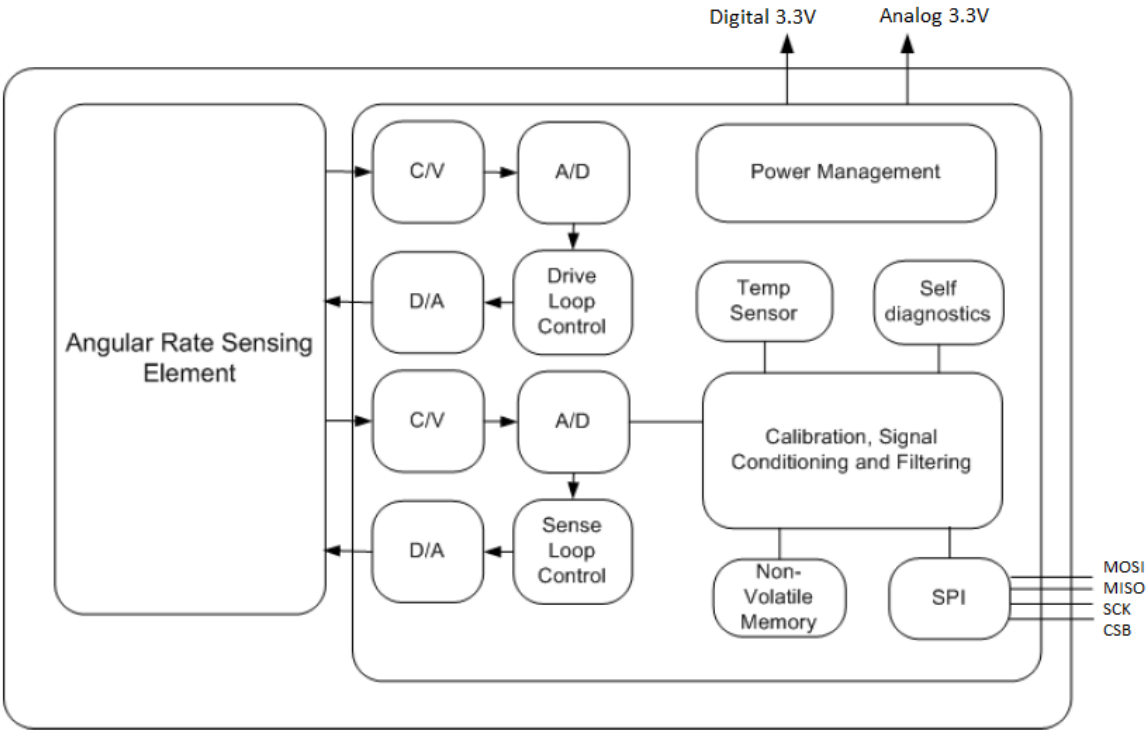

Figure 14. SCR2100-D08 component block diagram.

The angular rate sensing element is manufactured using Murata proprietary High Aspect Ratio (HAR) 3D-MEMS process, which enables making robust, extremely stable and low noise capacitive sensors.

The angular rate sensing element consists of moving masses that are purposely exited to in-plane drive motion. Rotation in sensitive direction causes out of plane movement that can be measured as capacitance change with the signal conditioning ASIC.

Downloaded from Arrow.com.

3.1 Factory Calibration

SCR2100-D08 sensors are factory calibrated. No separate calibration is required in the application. Parameters that are trimmed during production include sensitivities, offsets and frequency responses. Calibration parameters are stored to non-volatile memory during manufacturing. The parameters are read automatically from the internal non-volatile memory during the start-up.

It should be noted that assembly can cause minor offset/bias errors to the sensor output. If best possible offset/bias accuracy is required, system level offset/bias calibration (zeroing) after assembly is recommended.

Downloaded from Arrow.com.

4 Component Operation, Reset and Power Up

4.1 Component Operation

Simplified sensor power up sequence is shown in Figure 15 below. The SCR2100-D08 component has internal power-on reset circuit. It releases the internal reset-signal once the power supplies are within the specified range. After the reset, the sensor performs an internal startup sequence. During the startup sequence SCR2100-D08 reads configuration and calibration data from the non-volatile memory to volatile registers. 620ms after the power on or reset, sensor shall be able to provide valid angular rate data, separate measurement mode activation is not needed.

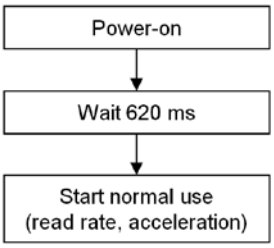

Figure 15. Simplified reset and power up sequence.

Sensor uses 60Hz low pass filter setting by default. In case the optional 10Hz low pass filter is used the filter setting can be set by writing the FLT bits to 01b in Status Summary register. See section 6.2.8 for more information on Status Summary register. Section 5.1.4 shows full SPI write frames for filter settings

SCR2100-D08 component has extensive internal failsafe diagnostics to detect over range and possible internal failures. If the internal failsafe diagnostics are used they should be enabled by clearing the status registers during component power up by following the sequence shown in section 4.2 (Figure 16).

Downloaded from Arrow.com.

4.2 Reset and Power Up Sequence For Enabling Internal Failsafe Diagnostics

Reset and power up sequence for enabling component internal failsafe diagnostics is shown below in Figure 16. After the reset, the sensor performs an internal startup sequence. 20 ms after the reset the SPI bus becomes accessible and the output filter can be set to a desired value. If the filter is not set to a valid value (60Hz or 10Hz setting), the default setting (00b = 60Hz) is used and the S_OK_C flag in Status Summary Register will indicate a failure. In 750ms (10Hz filter setting) or in 620ms (60Hz filter selection) the gyro shall be able to deliver valid data.

During the startup sequence the sensor performs a series of internal tests that will set various error flags in the sensor status registers and to clear them it is necessary to read all status registers after the startup sequence is complete.

Once startup sequence is completed, the normal operation is indicated with Status Summary register content of 0041h. In case of failure Common Status register is read, then sensor should be reset and re-started. In case the LOOPF_OK bit in Common Status register is failing, the sensor should be reset and re-started. After start up, in normal operation, when only RATE and TEMP registers are read, RS bits will indicate possible signal saturation and failure conditions normally. In case acceleration registers are read, RS bits will indicate a failure due to disabled acceleration functionality.

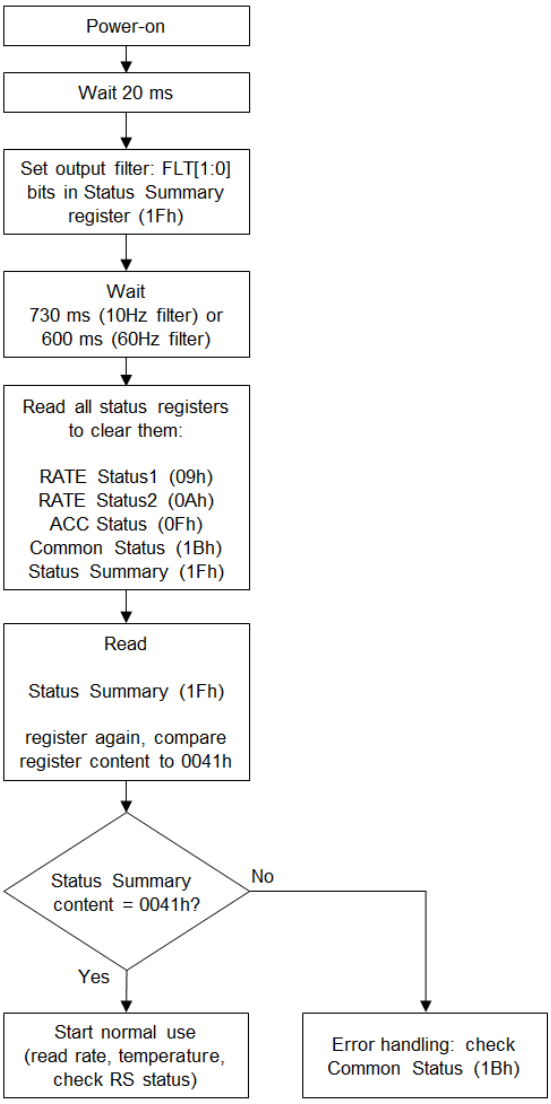

Figure 16. Reset and power up sequence.

Downloaded from Arrow.com.

5 Component Interfacing

5.1 SPI Interface

5.1.1 General

The SCR2100-D08 has one SPI interface for the angular rate sensor. SPI communication transfers data between the SPI master and registers of the SCR2100-D08 ASIC. The SCR2100-D08 always operates as a slave device in master-slave operation mode. 3-wire SPI connection cannot be used.

SPI interface pins:

CSB	Chip Select (active low)	MCU → ASIC
SCK	Serial Clock	MCU → ASIC
MOSI	Master Out Slave In	MCU → ASIC
MISO	Master In Slave Out	ASIC → MCU

5.1.2 Protocol

SPI communication uses off-frame protocol so each transfer has two phases.

The first phase contains the SPI command (Request) and the data (Response) of the previous command. The second phase contains the next Request and the Response to the Request of the first phase, see Figure 17.

Data word length is 32 bits, the data is transferred MSB first. The first response after reset is undefined and shall be discarded.

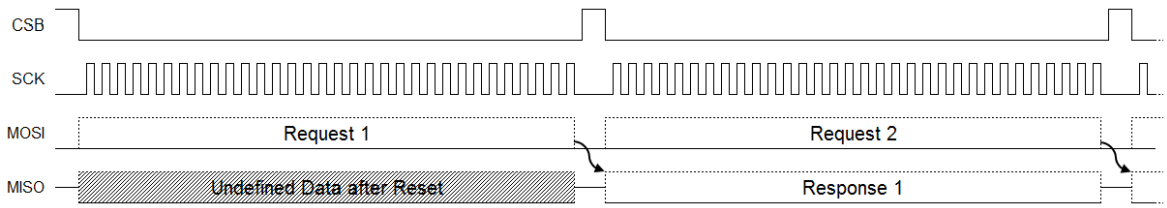

Figure 17. SPI protocol example.

The interleaved Request - Response cycle then continues as shown in Figure 18.

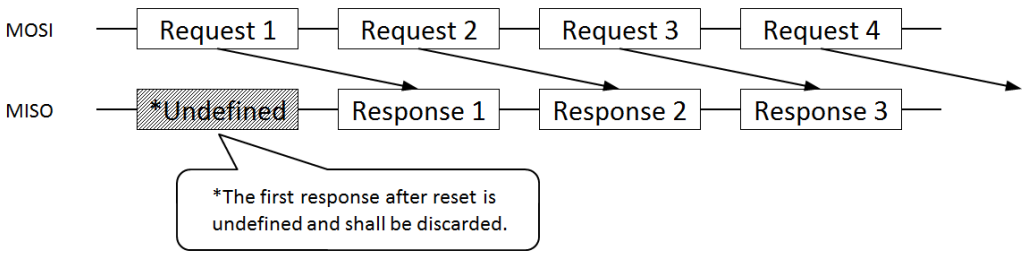

Figure 18. Request – Response frame relationship.

Downloaded from Arrow.com.

The SPI transmission is always started with the CSB falling edge and terminated with the CSB rising edge. The data is captured on the SCK's rising edge (MOSI line) and it is propagated on the SCK's falling edge (MISO line). This equals to SPI Mode 0 (CPOL = 0 and CPHA = 0), see Figure 19.

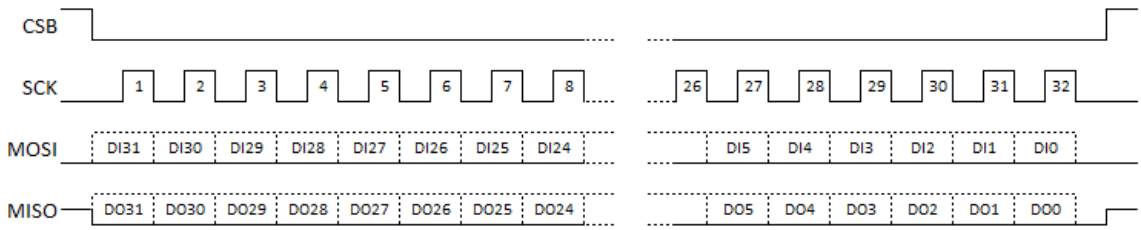

Figure 19. SPI Frame Format.

5.1.3 General Instruction format

The SPI frame is divided into four parts (See Figure 20 and Table 9):

1. Operation Code (OP)
2. Return status (RS, in MISO)
3. Data (DI, DO)
4. Checksum (CRC)

Unused bits shall be set to 0, this is important for the checksum calculation.

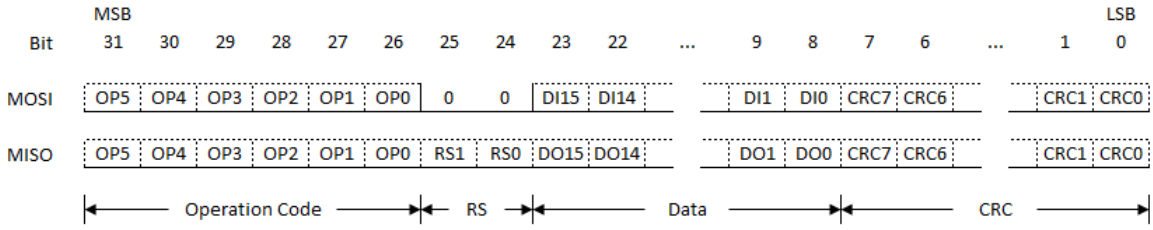

Figure 20. SPI instruction format.

Table 9. SPI bit definitions.

Bits	Name	MOSI	MISO
OP[5:0]	Operation code	Requested operation: • OP5: Write =1 / Read = 0 • OP[4:0] = Register address	Performed operation: • OP5: Write = 1 / Read = 0 • OP[4:0] = Register address
RS[1:0]	Return status	n.a.	Sensor status
D[15:0]	Data	Data to be written	Return data
CR[7:0]	Checksum	Checksum of MOSI bits [31:8]	Checksum of MISO bits [31:8]

Downloaded from Arrow.com.

5.1.4 Operations

Table 10. Operations and their equivalent SPI frames.

Operation	Register	SPI Frame Binary (OP, RS, Data, CRC)	SPI Frame Hex
Read RATE	RATE (01h)	000001 00 0000000000000000 11110111	040000F7h
Read TEMP	TEMP (07h)	000111 00 0000000000000000 11100011	1C0000E3h
Read RATE Status 1	RATE Status 1 (09h)	001001 00 0000000000000000 11000111	240000C7h
Read RATE Status 2	RATE Status 2 (0Ah)	001010 00 0000000000000000 11001101	280000CDh
Read ACC Status	ACC Status (15h)	001111 00 0000000000000000 11010011	3C0000D3h
Write Reset Control HardReset	Reset Control (16h)	110110 00 0000000000000100 00110001	D8000431h
Write Reset Control MonitorST	Reset Control (16h)	110110 00 0000000000001000 10101101	D80008ADh
Read Serial ID0	Serial ID0 (18h)	011000 00 0000000000000000 10100001	600000A1h
Read Serial ID1	Serial ID0 (19h)	011001 00 0000000000000000 10100111	640000A7h
Read Common Status	Common Status (1Bh)	011011 00 0000000000000000 10101011	6C0000ABh
Read Status Summary	Status Summary (1Fh)	011111 00 0000000000000000 10110011	7C0000B3h
Write Flt[1:0] =10b: set 60Hz filter active	Status Summary (1Fh)	111111 00 0010000000000000 00000110	FC200006h
Write Flt[1:0] =01b: set 10Hz filter active	Status Summary (1Fh)	111111 00 0001000000000000 11000111	FC1000C7h

5.1.5 Return Status

SPI frame Return Status bits (RS bits) indicate the functional status of the sensor, see Return Status definitions in Table 11.

Table 11. Return Status definitions.

RS[1]	RS[0]	Description
0	0	Initialization running
0	1	Normal operation of selected channel
1	0	Selftest of selected channel
1	1	Reserved or not existing register addressed, error of selected channel or common failure (see Status Summary Register bits S_OK_C, S_OK_R, S_OK_A) • S_OK_C is the summary of Common Status • S_OK_R is the summary of RATE Status 1 and RATE Status 2 • S_OK_A is the summary of ACC Status

The priority of the return status states is from high to low: 10 → 00 → 11 → 01.

Downloaded from Arrow.com.

5.1.6 Checksum (CRC)

For SPI transmission error detection a Cyclic Redundancy Check (CRC) is implemented, for details see Table 12.

Table 12. SPI CRC definition.

Parameter	Value
Name	CRC-8
Width	8 bit
Poly	1Dh (generator polynom: X8+X4+X3+X2+1)
Init	FFh (initialization value)
XOR out	FFh (inversion of CRC result)

The CRC register has to be initialized with FFh to ensure a CRC failure in case of stuck-at-0 and stuck-at-1 error on the SPI bus. C-programming language example for CRC calculation is presented in Figure 21. It can be used as is in an appropriate programming context.

```
// Calculate CRC for 24 MSB's of the 32 bit dword
// (8 LSB's are the CRC field and are not included in CRC calculation)
uint8_t CalculateCRC(uint32_t Data)
{
  uint8_t BitIndex;
  uint8_t BitValue;
  uint8_t CRC;

  CRC = 0xFF;
  for (BitIndex = 31; BitIndex > 7; BitIndex--)
  {
    BitValue = (uint8_t)((Data >> BitIndex) & 0x01);
    CRC = CRC8(BitValue, CRC);
  }
  CRC = (uint8_t)~CRC;
  return CRC;
}

static uint8_t CRC8(uint8_t BitValue, uint8_t CRC)
{
  uint8_t Temp;

  Temp = (uint8_t)(CRC & 0x80);
  if (BitValue == 0x01)
  {
    Temp ^= 0x80;
  }
  CRC <<= 1;
  if (Temp > 0)
  {
    CRC ^= 0x1D;
  }
  return CRC;
}
```

Figure 21. C-programming language example for CRC calculation.

CRC calculation example:
Read RATE register (01h) -> SPI[31:8] = 040000h -> CRC [7:0] -> F7h.
Further examples can be found in Table 10.

Downloaded from Arrow.com.

5.1.7 Recommendation for the SPI interface implementation

SPI communication may interfere with the measured angular rate signal due to sensor internal capacitive coupling. If the harmonic overtones of the SPI communication activity are close to gyro operational frequency, the SPI cross talk can be seen as increased noise level in angular rate signal.

Cross talk can be eliminated by choosing the output data rate (sample rate) in a suitable way, i.e. avoiding the overtones on the gyro operation frequency. For optimum performance it is recommended that 2.3kHz or 3.2kHz output data rate is used with maximum serial clock (SCK) frequency (8MHz). The design performance should be verified carefully.

Downloaded from Arrow.com.

6 Register Definition

6.1 Sensor Data Block

Table 13. Sensor data block.

Addr OP[4:0]	Bits	Register Name	No. of Bits	Read/ Write	Description
01h	[15:0]	RATE	16	R	Rate output in 2's complement format
07h	[15:0]	TEMP	16	R	Temperature sensor output in 2's complement format. See section 2.3 for temperature conversion example.

SPI read frames with CRC content for these registers are shown in Table 10.

6.1.1 Example of Angular Rate Data Conversion

For example, if RATE register read results: RATE = **05FFE08B**h, the register content is converted to angular rate as follows:

- 05h = 000001 01b
  - 000001b = operation code = Read RATE
  - 01b = return status (RS bits) = no error
- FFE0h = 1111 1111 1110 0000b = RATE register content
  - FFE0h in 2's complement format = -32d
  - Angular rate = -32LSB / sensitivity = -32LSB / (50LSB/(°/s)) = -0.64°/s
- 8Bh = CRC of 05FFE0h

6.1.2 Example of Temperature Data Conversion

For example, if TEMP register read results: TEMP = **1DFE6F4E**h, the register content is converted to temperature as follows:

- 1Dh = bin 000111 01b
  - bin 000111b = operation code = Read TEMP
  - 01 = return status (RS bits) = no error
- FE6Fh = bin 1111 1110 0110 1111 = TEMP register content
  - FE6Fh in 2's complement format = -401d
  - Temperature = 60 + (TEMP / 14.7) = 60 + [-401/14.7] = +32.7°C
  - See section 2.3 for temperature conversion equation
- 4Eh = CRC of 1DFE6Fh

Downloaded from Arrow.com.

6.2 Sensor Status Block

Table 14. Sensor status block.

Addr OP[4:0]	Bits	Register Name	No. of Bits	Read/ Write	Description
09h	[15:0]	RATE Status 1	16	R	Gyro sensor status
0Ah	[15:0]	RATE Status 2	16	R	Gyro sensor status
0Fh	[15:0]	ACC Status	16	R	Accelerometer status Note: accelerometer functionality is powered down, This register is read during sensor power up sequence, see more details in section 4.
15h	[15:0]	Test	16	R/W	R/W register for SPI communication checking
16h	[15:0]	Reset Control	16	R/W	Reset status and trigger bits
18h	[15:0]	Serial ID0	16	R	Component serial number least significant bits
19h	[15:0]	Serial ID1	16	R	Component serial number most significant bits
1Bh	[15:0]	Common Status	16	R	Status of common blocks
1Dh	[15:0]	Identification	16	R	Product type Identification
1Fh	[15:0]	Status Summary	16	R/W	Status overview

Note:
R/W for the register means, that the content of the register can be read, and that it is also possible to over write the content of the register in normal mode operation. The following signal blocks will then operate with the value written to the register. After a write cycle to the register, the register will keep its value until another write cycle or reset occurs.

SPI read and write frames with CRC content for these registers are shown in Table 10.

Downloaded from Arrow.com.

6.2.1 RATE Status 1 Register (09h)

Table 15. RATE Status 1 register.

D15	D14	D13	D12	D11	D10	D9	D8	D7	D6	D5	D4	D3	D2	D1	D0	Bit
-	-	-								-	-	-	-	-	-	Write
VCMF_OK	Vboost_OK	Reserved[7:0]								SDM_D_OK	dQ_Amp_OK	dDR_Amp_OK	Q_AmpCtrl_OK	DR_AmpCtrl_OK	OF_R_OK	Read

RATE Status 1 register indicates saturation or failure in gyroscope. Failure is indicated by setting OK flag to 0, the condition will be latched until a read cycle on the register.

Table 16. RATE Status 1 register bit description.

Register Bit	Description
OF_R_OK	This bit indicates signal path saturation and overflow conditions
DR_AmpCtrl_OK	Status of drive amplitude control
Q_AmpCtrl_OK	Status of compensation signal amplitude control
dDR_Amp_OK	Status of drive amplitude
dQ_Amp_OK	Status of compensation signal amplitude
SDM_D_OK	Status of drive path stability
VBoost_OK	Status of VBoost voltage
VCMF_OK	Status of biasing voltage

6.2.2 RATE Status 2 Register (0Ah)

Table 17. RATE Status 2 register.

D15	D14	D13	D12	D11	D10	D9	D8	D7	D6	D5	D4	D3	D2	D1	D0	Bit
-							-	-	-	-	-	-	-	-	-	Write
Reserved[6:0]							S_P_Pk_OK	S_N_OK	S_P_OK	D_N_OK	D_P_OK	SI_N_OK	SI_P_OK	DI_N_OK	DI_P_OK	Read

RATE Status 2 register indicates saturation or failure in gyroscope. Failure is indicated by setting OK flag to 0, the condition will be latched until a read cycle on the register.

Downloaded from Arrow.com.

Table 18. RATE Status 2 register bit description.

Register Bit	Description
DI_P_OK	Indicates saturation or failure condition
DI_N_OK	Indicates saturation or failure condition
SI_P_OK	Indicates saturation or failure condition
SI_N_OK	Indicates saturation or failure condition
D_P_OK	Indicates saturation or failure condition
D_N_OK	Indicates saturation or failure condition
S_P_OK	Indicates saturation or failure condition
S_N_OK	Indicates saturation or failure condition
S_P_Pk_OK	Indicates saturation or failure condition

6.2.3 ACC Status Register (0Fh)

ACC Status register indicates accelerometer related failures since the accelerometer functionality is powered down in SCR2100-D08.

6.2.4 Reset Control Register (16h)

Table 19. Reset Control register.

D15	D14	D13	D12	D11	D10	D9	D8	D7	D6	D5	D4	D3	D2	D1	D0	Bit
Reserved[11:0]												MonitorST	HardReset	Reserved[1:0]		Write
												-	-			Read

Table 20. Reset Control register bit description.

Register Bit	Description
HardReset	Writing this bit to 1 generates an EXTRESN compatible signal. Thus it is possible to generate hardware reset via SPI interface
MonitorST	Writing this bit to 1 initiates self test of internal monitoring circuit

Downloaded from Arrow.com.

6.2.5 Serial ID0 and Serial ID1 Registers (18h and 19h)

SCR2100-D08 serial number is laser marked on top of component lid and stored in to Serial ID0 and Serial ID1 registers. Serial number is in 32bit unsigned integer format. Serial number register bit descriptions are shown below in Table 21 and Table 22.

Table 21. Serial ID0 (18h) register (serial number LSB word).

D15	D14	D13	D12	D11	D10	D9	D8	D7	D6	D5	D4	D3	D2	D1	D0	Bit
-	-	-	-	-	-	-	-	-	-	-	-	-	-	-	-	Write
ID0[15:0]																Read

Table 22. Serial ID1 (19h) register (serial number MSB word).

D15	D14	D13	D12	D11	D10	D9	D8	D7	D6	D5	D4	D3	D2	D1	D0	Bit
-	-	-	-	-	-	-	-	-	-	-	-	-	-	-	-	Write
ID1[15:0]																Read

Example serial number conversion shown below:

- Serial ID0 register content: 8612h = bin 1000 0110 0001 0010
- Serial ID1 register content: 8FB9h = bin 1000 0110 0001 0010
- Full serial number: 8FB9 8612h = 2411300370
- Serial number laser marked on lid is 2411300370SCC

Downloaded from Arrow.com.

6.2.6 Common Status Register (1Bh)

Table 23. Common Status register.

D15	D14	D13	D12	D11	D10	D9	D8	D7	D6	D5	D4	D3	D2	D1	D0	Bit
-	-	-	-	-	-	-	-	-	-	-	-	-	-	-	-	Write
NMode_OK	MonCheck_OK	CRC_OTP_OK	CRC_SPI_OK	OF_C_OK	StateMon[3:0]				LOOPF_OK	TEMP_Mon_OK	VBG2_0P9V_OK	Reserved	VDDD_OK	VBG1_0P9V_OK	DVDD_OK	Read

Common Status register indicates failure in common signals/blocks. Failure is indicated by setting OK flag to 0, the condition will be latched until a read cycle on the register.

Table 24. Common Status register bit description.

Register Bit	Description
DVDD_OK	Status of DVDD digital 3.3V supply voltage
VBG1_0P9V_OK	Status of internal reference voltage
VDDD_OK	Status of digital core supply voltage
VBG2_0P9V_OK	Status of internal reference voltage
TEMP_Mon_OK	Status of temperature sensor signal
LOOPF_OK	Status of loop filter
StateMon[3:0]	Status of state machine for self test of monitoring circuit.
OF_C_OK	This bit indicates signal path saturation and overflow conditions related to common signals/blocks
CRC_SPI_OK	This bit indicates CRC failure in SPI communication
CRC_OTP_OK	This bit indicates CRC failure in OTP memory
MonCheck_OK	Result of the monitoring circuit self test
NMode_OK	Bit = 0 : ASIC test mode activated Bit = 1 : ASIC is in normal mode

Downloaded from Arrow.com.

6.2.7 Identification Register (1Dh)

Table 25. Identification register.

D15	D14	D13	D12	D11	D10	D9	D8	D7	D6	D5	D4	D3	D2	D1	D0	Bit
-	-	-	-	-	-	-	-	-	-	-	-	-	-	-	-	Write
Identification[15:0]																Read

Table 26. Identification register bit description.

Register Bit	Description
Identification	Default value: 0500h (bin 0000 0101 0000 0000) for SCR2100-D08

6.2.8 Status Summary Register (1Fh)

Table 27. Status Summary register.

D15	D14	D13	D12	D11	D10	D9	D8	D7	D6	D5	D4	D3	D2	D1	D0	Bit
-	-			-					-	-		-	-		-	Write
STC_EN	SelfTestDis	Flt[1:0]		Reserved[5:0]					S_OK_C	Reserved[1:0]		S_OK_A	Reserved[1:0]		S_OK_R	Read

Table 28. Identification register bit description.

Register Bit	Description
S_OK_R	Sensor status summary flag for gyro
S_OK_A	Sensor status summary flag for accelerometer Note: since accelerometer functionality is powered down, S_OK_A flag shows always error (S_OK_A='0')
S_OK_C	Status summary flag for common blocks and functionalities
Flt[1:0]	Output Filter Selection: 00b: 60Hz filter active for GYRO signal (default after reset), with Flt default setting S_OK_C is set to 0 01b: 10Hz filter active for GYRO signals 10b: 60Hz filter active for GYRO signal 11b: Reserved
SelfTestDis	SelfTestDis='1' indicates that the self test of the monitoring circuit is disabled.
STC_EN	STC_EN='1' indicates that the accelerometer self test is enabled. Note: since accelerometer functionality is powered down, STC_EN='0', (not functional).

Downloaded from Arrow.com.

7 Application information

7.1 Application Circuitry and External Component Characteristics

See Figure 22 and Table 29 for specification of the external components. The PCB layout example is shown in Figure 23.

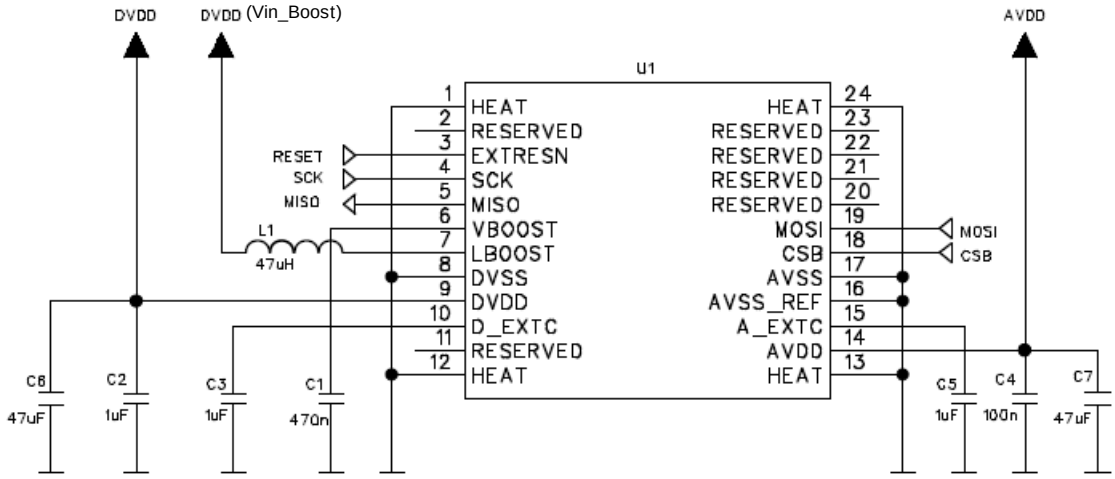

Figure 22. Application schematic.

Table 29. External component description for SCR2100-D08.

Symbol	Description	Min.	Nom.	Max.	Unit
C1	High voltage capacitor. Voltage rating ESR Recommended component: Murata GCM21BR71H474KA55, 0805, 470N, 50V, X7R	376 30	470	564 100	nF V mΩ
C2	Decoupling capacitor between DVDD and DVSS ESR Recommended component: Murata GCM21BR71C105KA58, 0805, 1U, 16V, X7R	700	1000	1300 100	nF mΩ
C3	Decoupling capacitor between D_EXTC and DVSS ESR Recommended component: Murata GCM21BR71C105KA58, 0805, 1U, 16V, X7R	700	1000	1300 100	nF mΩ
C4	Decoupling capacitor between AVDD and AVSS ESR Recommended component: Murata GCM188R71C104KA37, 0603, 100N, 16V, X7R	70	100	130 100	nF mΩ
C5	Decoupling capacitor between A_EXTC and AVSS ESR Recommended component: Murata GCM21BR71C105KA58, 0805, 1U, 16V, X7R	700	1000	1300 100	nF mΩ
C6, C7	Optional decoupling capacitor ESR Recommended component: Murata GRM32ER71A476KE15L, 1210, 47U, 10V, X7R	22	47	 100	µF mΩ
L1	Inductance for high voltage generation from Vin_Boost ESR Recommended component: Bourns CM322522-470KL	37	47	57 5	µH Ω

Downloaded from Arrow.com.

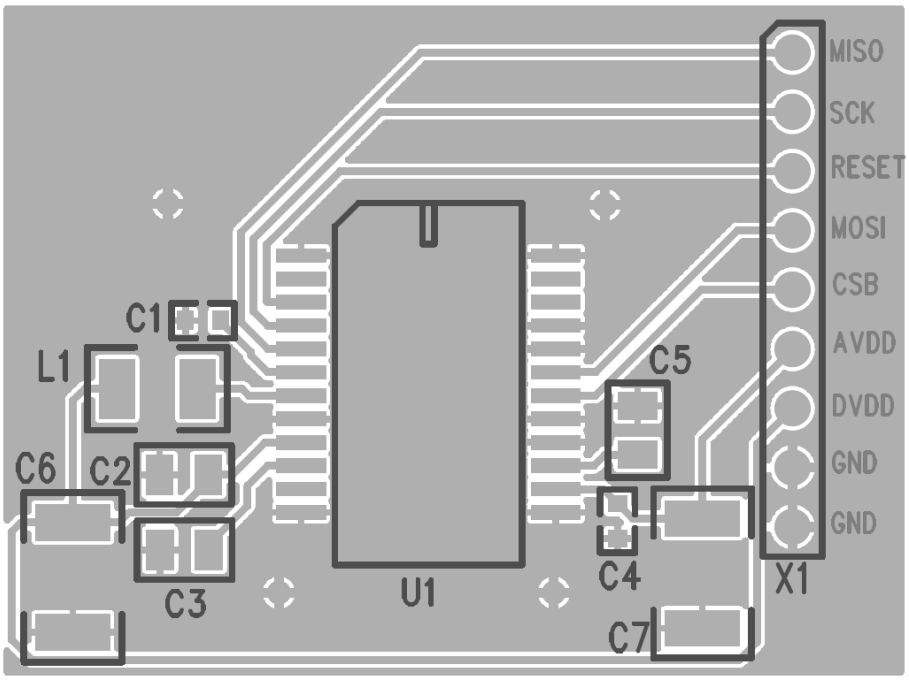

Figure 23. Application PCB layout.

General circuit diagram and PCB layout recommendations for SCR2100-D08 (refer to Figure 22 and Figure 23):

1. Connect decoupling SMD capacitors (C1 - C5) right next to respective component pins.
2. Locate ground plate under component.
3. Do not route signals or power supplies under the component on top layer.
4. Minimize the trace length between the L1 inductor and LBOOST pin (pin 7).
5. Ensure good ground connection of DVSS, AVSS_REF and AVSS pins (pins 8, 15, 16).
6. For optimum performance the use of decoupling capacitors C6 and C7 is recommended. Capacitor C6 should be located close to C2 and C7 close to C4.

7.2 Assembly Instructions

Usage of PCB coating materials may effect component performance. The coating material and coating process used should be validated. For additional assembly related details please refer to “Technical Note 96” for assembly instructions:
TN96_Assembly_Instructions_for_SCC2000_Series

Downloaded from Arrow.com.

8 Order information

Table 30. SCR2100-D08 order codes with packing quantity.

Order code	Description	Packing	Qty
SCR2100-D08-004	Gyro (X-axis ±125dps) with digital SPI i/f	Bulk	4pcs
SCR2100-D08-05	Gyro (X-axis ±125dps) with digital SPI i/f	T&R	50pcs
SCR2100-D08-6	Gyro (X-axis ±125dps) with digital SPI i/f	T&R	600pcs

Downloaded from Arrow.com.