REVISIONS					
REV.	ECN NO.	LOCATION	DESCRIPTION	DATE	DESIGN
A0	N/A		INITIAL RELEASE	/	/
A1	N/A		图面升级整理图面	2025.06.26	阿树

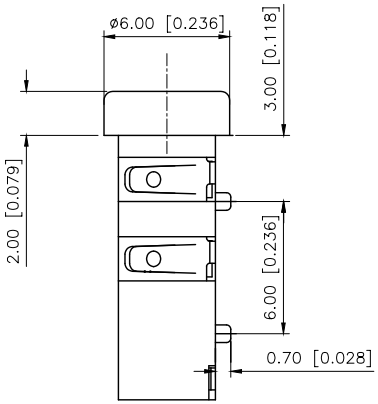

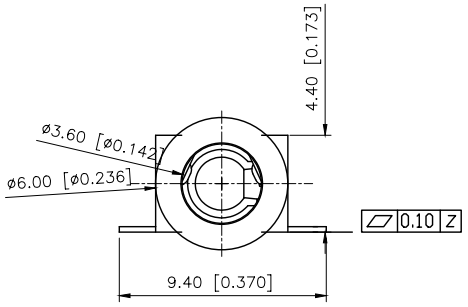

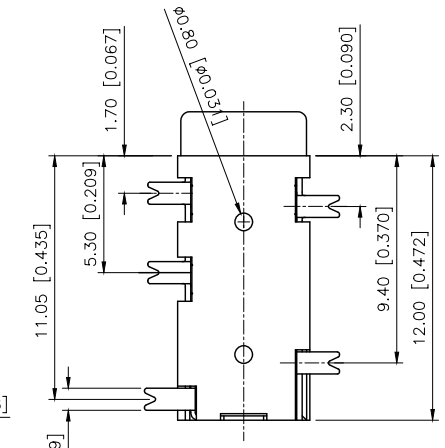

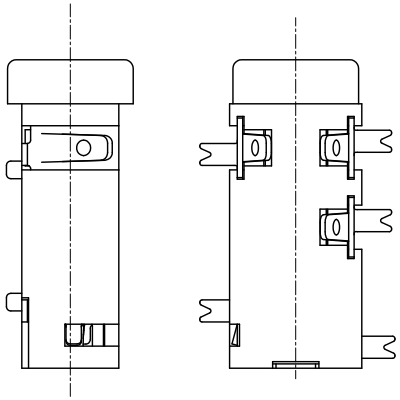

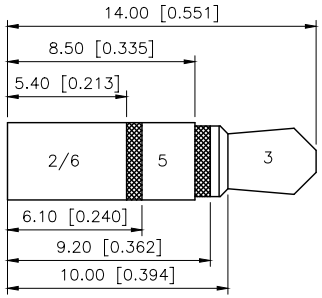

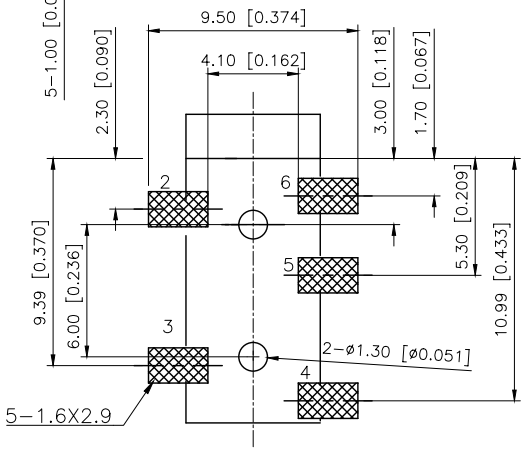

P.C.B LAYOUT TOP VIEW

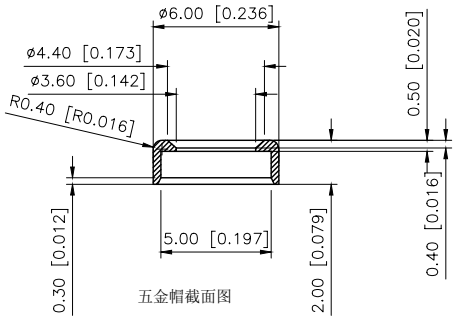

五金帽截面图

Model No.	PJ-327U-SMT
Schematic	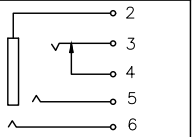

Plastic	High Temp. Thermoplastic	
Terminal 6	Phosphor Bronze	Gold
Terminal 5	Phosphor Bronze	Gold
Terminal 4	Phosphor Bronze	Gold
Terminal 3	Phosphor Bronze	Gold
Terminal 2	Phosphor Bronze	Gold
PAPT NAMF	MATERIAL	PLATING

AuGLAR	±5°
X.	±0.40
X.x	±0.30
X.xx	±0.20
X.xxx	±0.15
UNSPECIFIED TOLERAuCES	

XKB 星坤 Connection

DESIGN	阿树	VIEW:	MODEL TYPE: 3.5 PHONE JACK
CHECKED		UNIT: mm/in	PART NO.: PJ-327U-SMT
APPROVED		SIZE: A4	DWG NO.: X-PJ-327U-SMT

XKB INDUSTRIAL PRECISION CO.,LIMITED

SCALE	PAGE	REVISION
N/A	1/1	A1

www.helloxkb.com www.helloxkb.cn www.xk-dg.cn