REV.	DESCRIPTION OF REVISIONS	APPR.	CHEC.	DRAW.	DATE
1	NEW			Jick	2019/05/08
2	Original Model C8606-1			Keey	2023/10/19

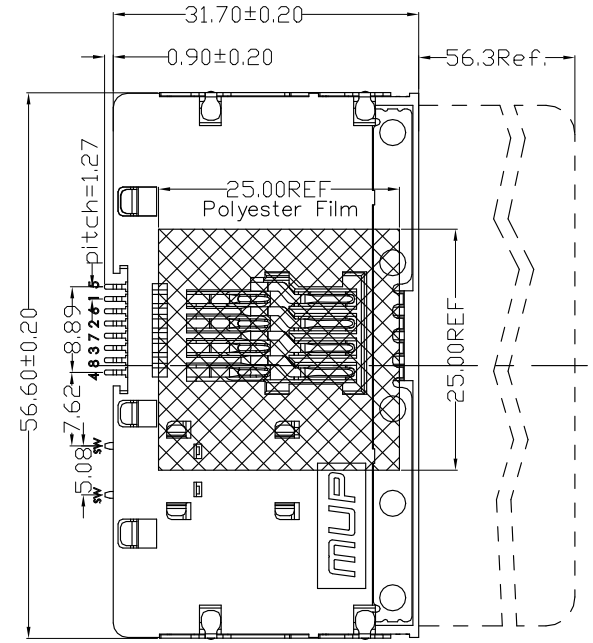

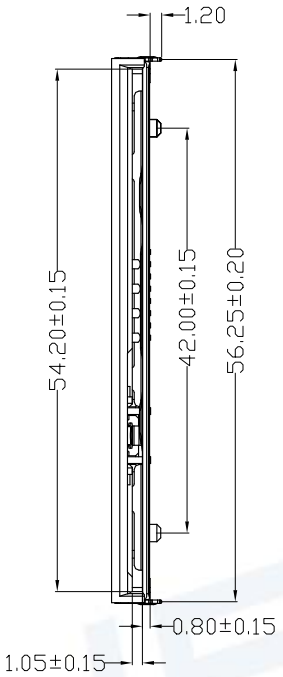

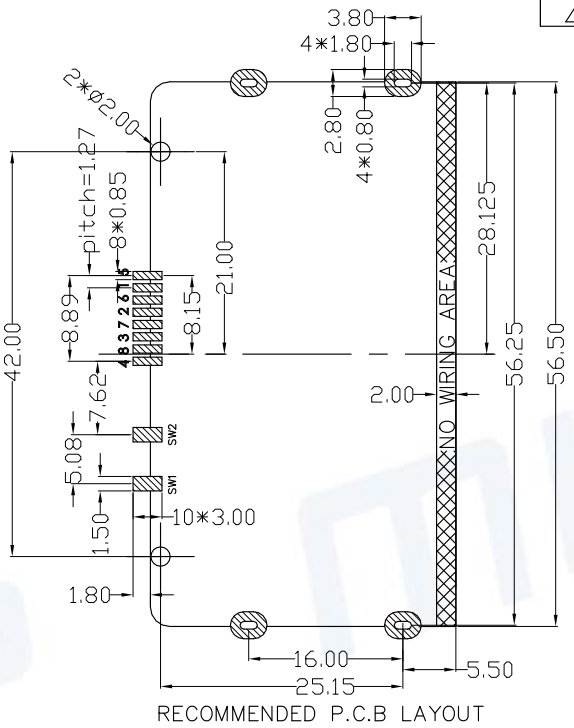

RECOMMENDED P.C.B LAYOUT

COMPONENT SIDE(TOLERANCE ±0.05)
Coplanarity of metal solder pins 0.15mm
Recommendating of solder paste thickness > 0.15mm
PAD AREA STAND OFF AREA

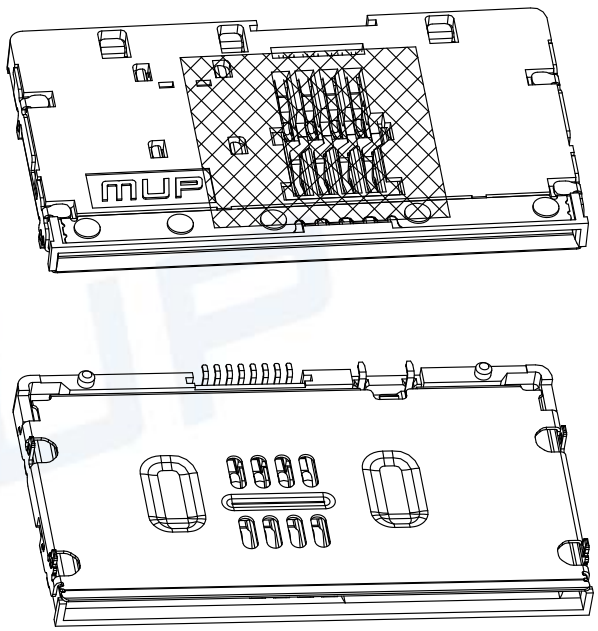

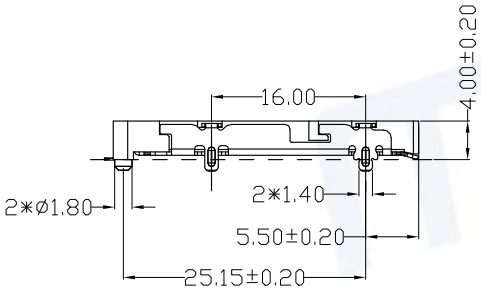

TECHNICAL CHARACTERISTICS

1.General Characteristics
Dimensions: 56.60LX31.70WX4.00H mm
Weight: Approx9.5±0.5g
Durability: 500,000 cycles min.

2.Electrical Characteristics
Contact resistance: 100mΩ max
Insulation resistance: 1000MΩ min

3.Solderability
IR reflow: 260°C.10sec.Max
Manual soldering: 400°C,5sec.Max

4.Environmental Characteristics
Operating temperature: −40°C~+70°C
Operating humidity: 10%~+95%RH

ITEM	PART NAME	Q'TY	MATERIAL	FINISH
1	BASE	1	Hi-temp Thermoplastic	Black UL94V-0
2	COVER	1	SUS	Ni plated
3	DATA CONTACT	8	Copper Alloy	Contact area:15u"Au plated
4	SWITCH CONTACT	1		Contact area:Silver plated
5	FLAKE	1	SUS	
6	SLIDE	1	Hi-temp Thermoplastic	Black UL94V-0
7	ESD	1	SUS	Ni plated

ELECTRIC FUNCTION	DETECT SWITCH
WITHOUT CARD	OPEN
CARD INSERTED	CLOSED

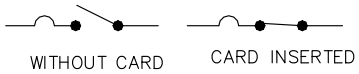

SWITCH OPERATION DIAGRAM

Pb RoHS
PROCESS COMPLIANT

Unless otherwise specified, other tolerance are:

X	±0.35	X°	±5°
X.X	±0.25	X.X°	±4°
X.XX	±0.15	X.XX°	±3°
X.XXX	±0.10	X.XXX°	±2°

PROJ. | UNIT mm | SCALE 1:1

CUSTOMER DRAWING

MUP ® MUP INDUSTRIAL CO.,LTD.

NAME: Smart Card Connector
MODEL NO: MUP-C8606-01
TYPE : Normally open (Sealed SW)

DRAWN	Jick	2019 05 08	DWG NO.: DWG-C8606-01-01
CHECKED	Keey	2019 05 08	SHEET 1/1 / REVISION 2
APPROVAL	Simon	2019 05 08	