REV.	DESCRIPTION OF REVISIONS	APPR.	CHEC.	DRAW.	DATE
1	NEW			Zoey	2022/11/15
2	Original Model C8622-2			Jicks	2023/10/19

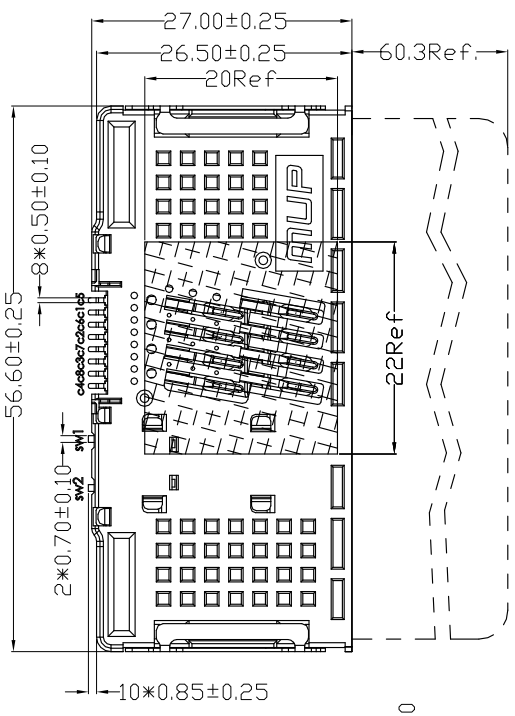

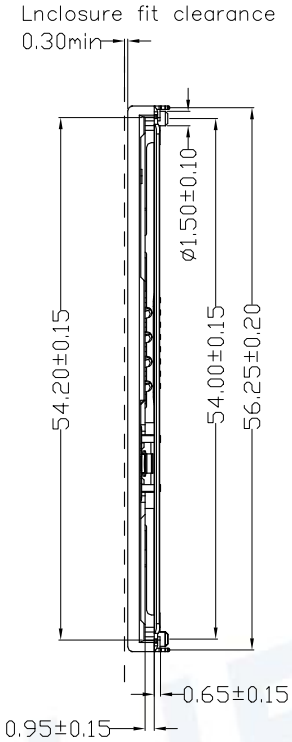

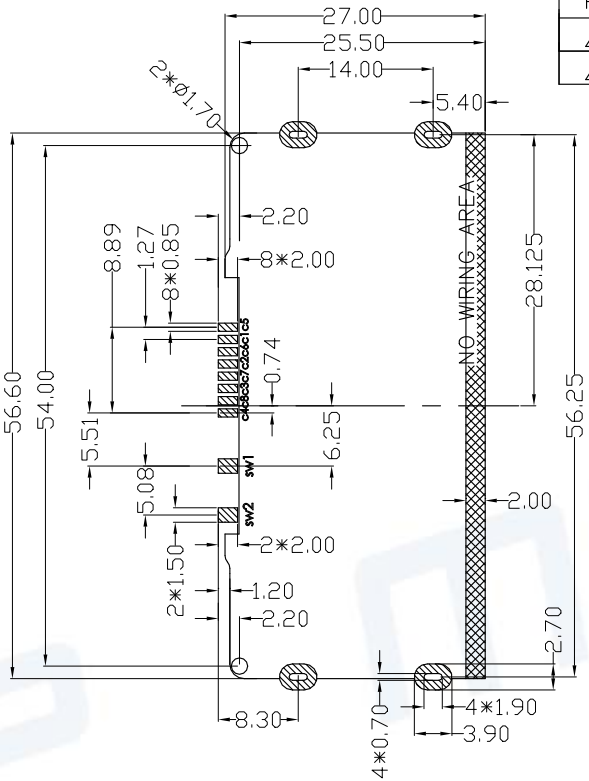

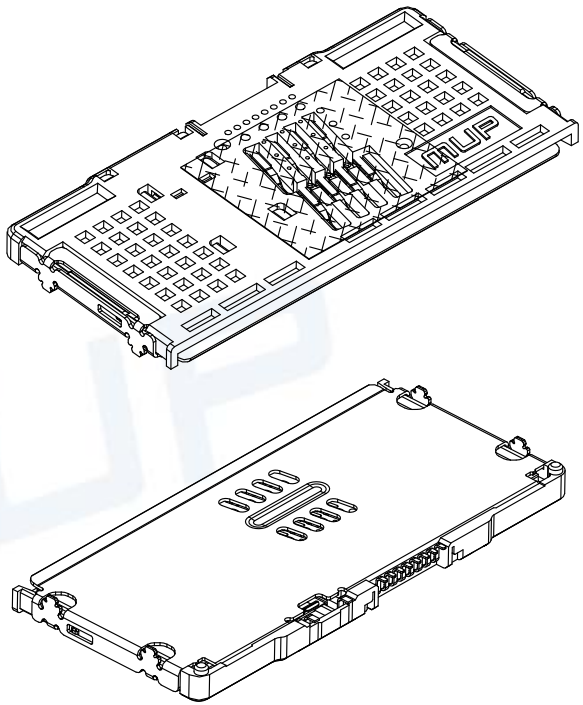

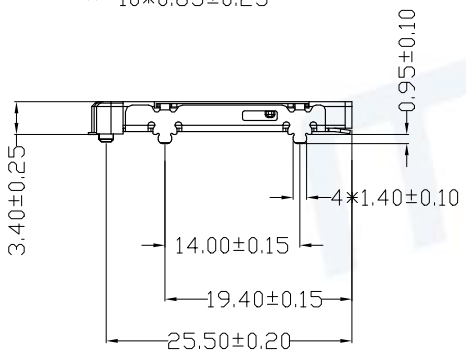

RECOMMENDED P.C.B LAYOUT

COMPONENT SIDE(TOLERANCE ±0.05)

Coplanarity of metal solder pins ≤0.10mm

Recommendation of solder paste thickness > 0.20mm

PAD AREA STAND OFF AREA

TECHNICAL CHARACTERISTICS

1.General Characteristics

Dimensions: 56.60LX27.00WX3.40H mm

Weight: Approx7.5±0.5g

Durability: 500,000 cycles min.

Contact force : 0.2~0.60 N.(EMV spec)

2.Electrical Characteristics

Contact resistance: 100mΩ typical,200mΩ max

Insulation resistance: >1000MΩ/500V DC

3.Solderability

IR reflow: 260℃. 10sec.Max

Manual soldering: 400℃,5sec.Max

4.Environmental Characteristics

Operating temperature: −40℃~+85℃

Operating humidity: 10%~+95%RH

ITEM	PART NAME	Q'TY	MATERIAL	FINISH
1	BASE	1	Hi-temp Thermoplastic	Black UL94V-0
2	COVER	1	SUS	Ni plated
3	DATA CONTACT	8	Copper Alloy	Contact area:15u"Au plated
4	SWITCH CONTACT	1		Contact area:Silver plated
5	FLAKE	1	SUS	

ELECTRIC FUNCTION	DETECT SWITCH
WITHOUT CARD	OPEN
CARD INSERTED	CLOSED

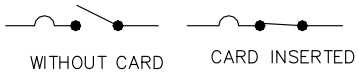

SWITCH OPERATION DIAGRAM

RoHS PROCESS COMPLIANT

Unless otherwise specified, other tolerance are:

X	±0.45	X°	±5°
X.X	±0.35	X.X°	±4°
X.XX	±0.25	X.XX°	±3°
X.XXX	±0.10	X.XXX°	±2°

PROJ. | UNIT mm | SCALE 1:1

CUSTOMER DRAWING

MUP® MUP INDUSTRIAL CO.,LTD.

NAME: Smart Card Connector

MODEL NO: MUP-C8622-02

TYPE : Normally open (Sealed SW)

DRAWN	Zoey	2022/11/15
CHECKED	Keey	2022/11/15
APPROVAL	Simon	2022/11/15

DWG NO.: DWG-C8622-02-01

SHEET 1/1 | REVISION 2