REVISIONS					
REV.	ECN NO.	LOCATION	DESCRIPTION	DATE	DESIGN
A0	N/A		INITIAL RELEASE	/	/
A1	N/A		图面升级整理图面	2025.1.4	阿树

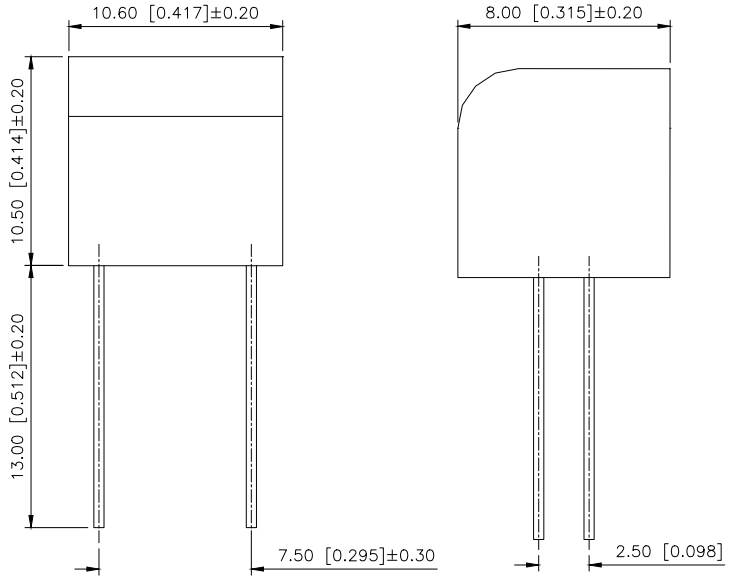

Specifications(规格):
1.Voltage rating(额定电压):1.65~1.6V
2.Current rating(额定电流):10mA MAX
3.Withstanding voltage(耐压值):≥500V AC/minute
4.Open circuit resistance(开路电阻) : > 10M ohm
5.Closed circuit resistance(闭路电阻) : < 10 ohm
6.Conduction time(导通时间) : > 2ms
7.Operating life(操作寿命) : 200,000 times
8.Temperature range(使用温度):-10℃~+75℃

D:\??\??????\??????\PDF Images\SR-0609-07(A0)6a3c9657.png

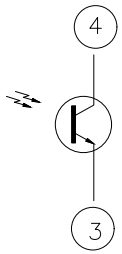

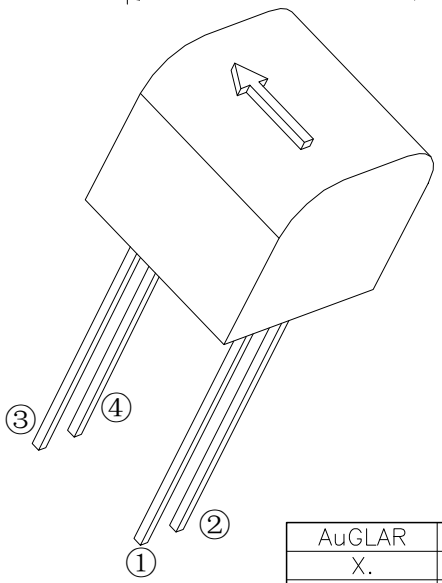

序号	零件名称	材质	数量
6	红外线对射管	二极管	2
5	仓盖	黄铜，镀镍	1
4	仓体	黄铜，镀镍	1
3	胶盖	PA66	1
2	胶芯	PA66	1
1	滚珠	黄铜，镀镍	1

AuGLAR	±5°
X.	±0.40
X.x	±0.30
X.xx	±0.20
X.xxx	±0.15
UNSPECIFIED TOLERAuCES	

XKB Connection 星创

DESIGN	阿树	VIEW:	MODEL TYPE: Vibration transducer
CHECKED		UNIT: mm/in	PART NO.: SR-0609-07
APPROVED		SIZE: A4	DWG NO.: X-SR-0609-07

XKB INDUSTRIAL PRECISION CO.,LIMITED

SCALE	PAGE	REVISION
N/A	1/1	A1