| REV. | DESCRIPTION OF REVISIONS | APPR. | CHEC. | DRAW. | DATE |
|---|---|---|---|---|---|
| 1 | NEW | | | Jick | 2022/06/29 |
| 2 | Original Model C8621-1 | | | Keey | 2023/10/19 |

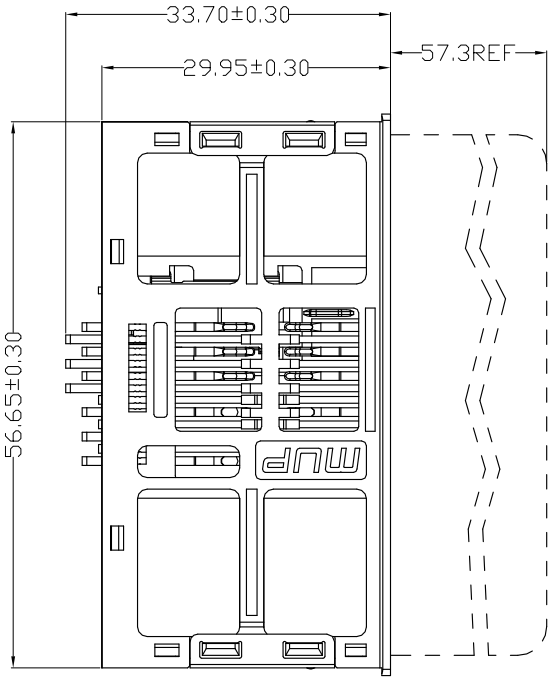


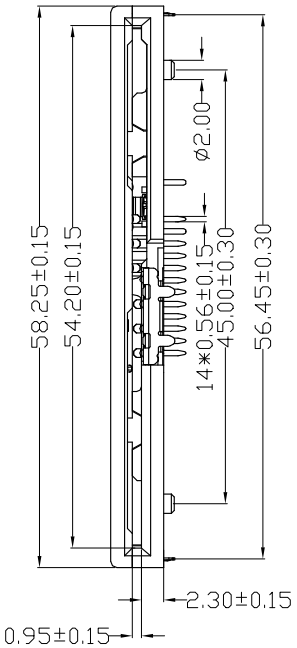


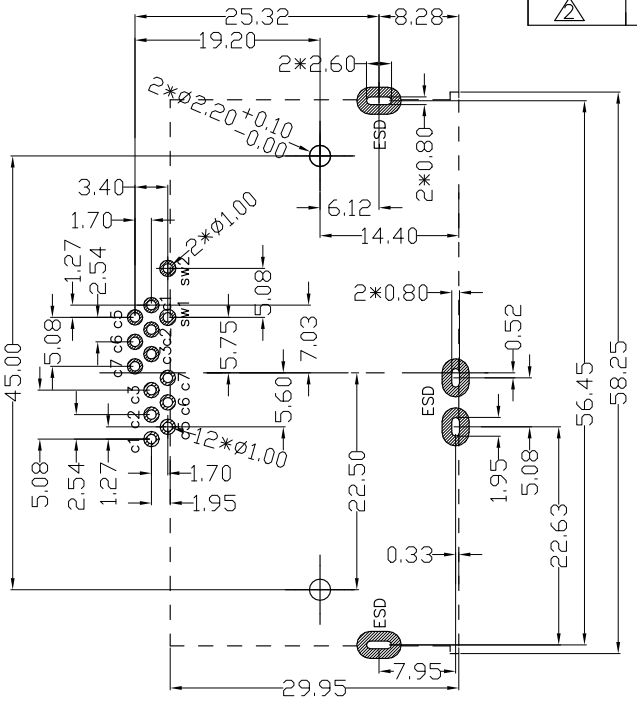


RECOMMENDED P.C.B LAYOUT
COMPONENT SIDE(TOLERANCE ±0.05)

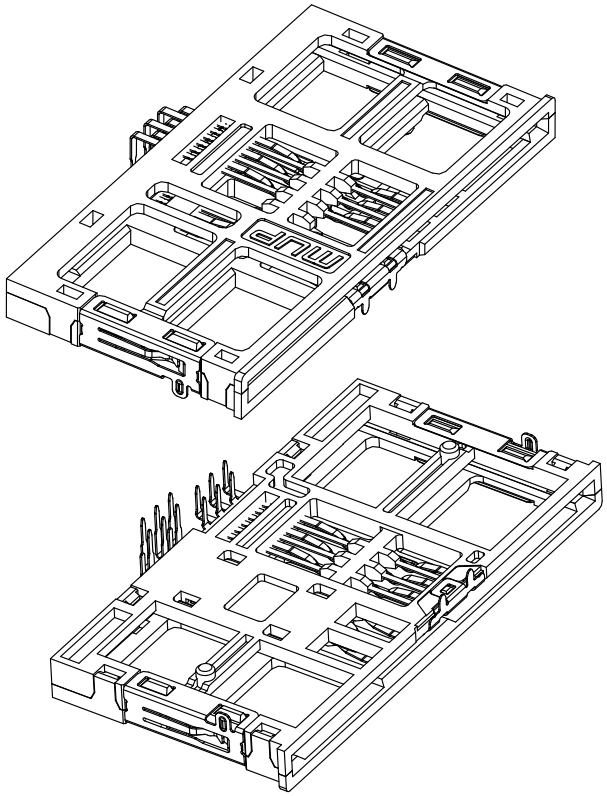

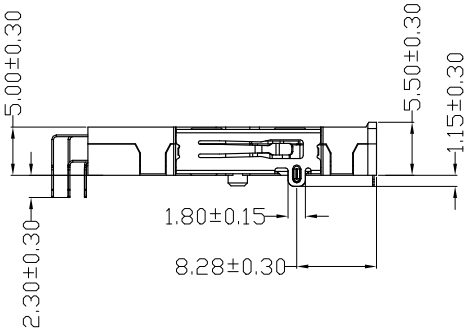


| ITEM | PART NAME | Q'TY | MATERIAL | FINISH |
|---|---|---|---|---|
| 1 | BASE | 1 | Hi-temp Thermoplastic | Black UL94V-0 |
| 2 | COVER | 1 | Hi-temp Thermoplastic | Black UL94V-0 |
| 3 | DATA CONTACT | 12 | Copper Alloy | Contact area:15u"Au plated |
| 4 | SWITCH CONTACT | 1 | | Contact area:Silver plated |
| 5 | ESD2 | 2 | SUS | Plated: Tin over all |
| 6 | ESD1 | 1 | SUS | Plated: Tin over all |
| 7 | FLAKE | 1 | SUS | |

TECHNICAL CHARACTERISTICS

1.General Characteristics

Dimensions: 58.25X29.95X5.50 mm

Weight: Approx 4.8±0.5g

Durability: 500,000 cycles min.

2.Electrical Characteristics

Contact resistance: 200mΩ max

Insulation resistance: 1000MΩ min

3.Solderability

Manual soldering: 350°C,3sec.Max

4.Environmental Characteristics

Operating temperature: -25°C~+60°C

Operating humidity: 10%~+95%RH

| ELECTRIC FUNCTION | DETECT SWITCH |
|---|---|
| WITHOUT CARD | OPEN |
| CARD INSERTED | CLOSED |

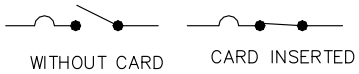


SWITCH OPERATION DIAGRAM

RoHS
PROCESS COMPLIANT

Unless otherwise specified, other tolerance are:

| | | | |
|---|---|---|---|
| X | ±0.45 | X° | ±5° |
| X.X | ±0.35 | X.X° | ±4° |
| X.XX | ±0.25 | X.XX° | ±3° |
| X.XXX | ±0.10 | X.XXX° | ±2° |

PROJ. | UNIT mm | SCALE 1:1

CUSTOMER DRAWING

MUP® MUP INDUSTRIAL CO.,LTD.

NAME: **Smart Card Connector**

MODEL NO: **MUP-C8621-01**

TYPE: **Normally open (Sealed SW)**

| | | |
|---|---|---|
| DRAWN | Jick | 2022/06/29 |
| CHECKED | Keey | 2022/06/29 |
| APPROVAL | Simon | 2022/06/29 |

DWG NO.: DWG-C8621-01-01

SHEET 1/1 | REVISION 2