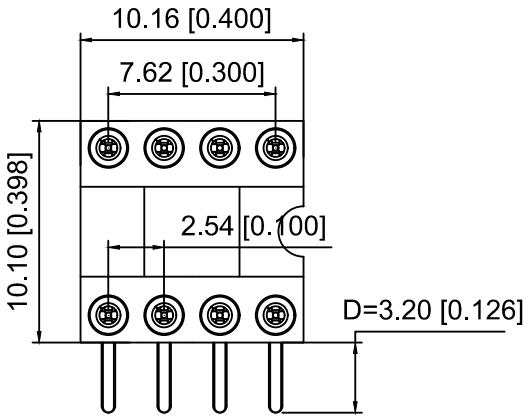

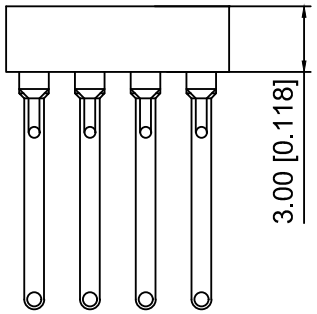

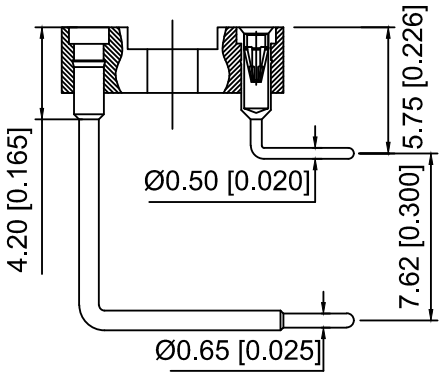

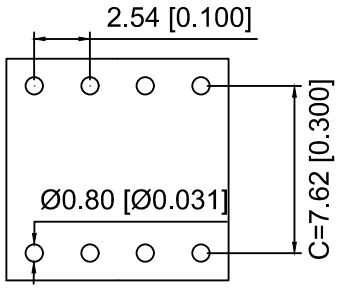

Recommended P.C.B
Layout(±0.05)

Technical Date
Pin(outer sleeve):Brass,machined CuZn38pb2
Cllp (Contact 4 FInger):Beryllium copper,heat teated
Insulator:PPS UL94V-0 colour:black
Gold Plated:2um"/80u"NI,GF
Current rating:3Amps
Mating PinØ:0.38/0.56mm
Mechanical Life:min 500 cycles
Contact resistance: 10mΩ max
Dielectric strength:1000V
Operaling temperature:-40 ℃ to +105℃
Soldering temperature:+255℃

X5621	F	R	-2x06-	C762	D32	-2500
①	②	③	④	⑤	⑥	⑦

1.Series No
2.Category:F-Female
3.Welding Board Angle:R-Straight 90°
4.Row No-Pin No:2xXX-2x01Pin-2xXXPin
5.line spacing:C=7.62mm
6.Pin Length:D=3.2mm
7.2500:Type2500

X5621FR-2x06-C762D32-2500	PPS	Brass	X5621W
PART N0	Material	Material(Pin)	Suitable XKB Wafer

MARK	DESCRIPTION	DATE	REVISED	APPROVED
ΔX				
ΔX				
ΔX				

REVISIONS

ANGLAR	±5°
L≤ 4	±0.2
4<L≤ 16	±0.3
16<L≤ 63	±0.4
L> 63	±0.5

UNSPECIFIED TOLERANCES

www.helloxkb.com www.helloxkb.cn www.xk-dg.cn

XKB INDUSTRIAL PRECISION CO.,LIMITED

DSND		SCALE: N/A	MODEL TYPE: 2.54mm BTB Style Connector
DWN		VIEW:	PART NO.: X5621FR-2x06-C762D32-2500
CHKD		UNIT: mm/in	DWG NO.: X-X5621FR-2x06-C762D32-2500
APPD		SIZE: A4	

WEIGHT	SHEET	REVISION
	1/1	A0