| REVISIONS | | | | | |
|---|---|---|---|---|---|
| REV. | ECN NO. | LOCATION | DESCRIPTION | DATE | DESIGN |
| A0 | N/A | | INITIAL RELEASE | / | / |
| A1 | N/A | | 图面升级整理图面 | 2025.1.3 | 阿树 |

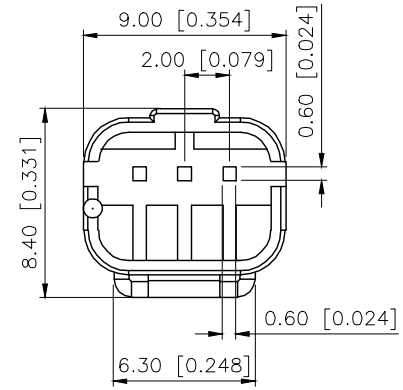


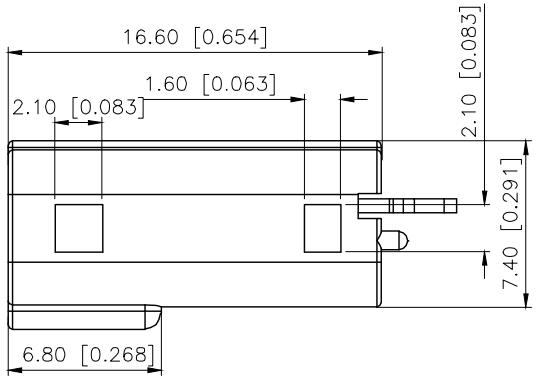


Specifications:
规格:
Voltage rating:100V AC/DC
额定电压：100V AC/DC
Current rating:3A AC/DC
额定电流：3A AC/DC
Withstanding voltage:1000V AC/minute
耐受电压：1000V AC/分钟
Temperature range:−40℃−+85℃
温度范围：−40℃−+85℃
Insulation resistance:1000MΩ min
绝缘电阻：1000MΩ Min
Contact resistance:20mΩ Max
接触电阻：20mΩ Max

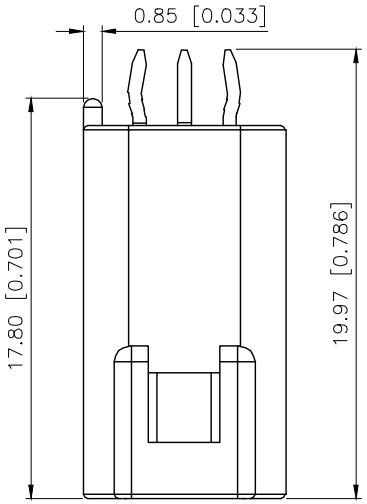


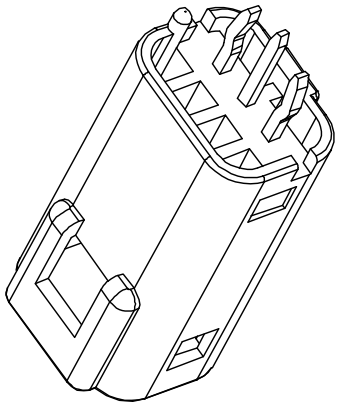

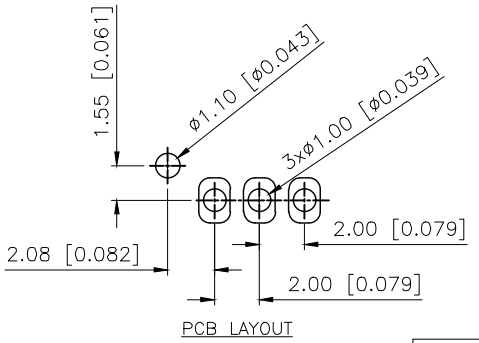


PART NO.:

K 205001 W V−03−PT SN
① ② ③ ④ ⑤ ⑥ ⑦

①K:XKBTEK−Car Connector
②XKB Series No
③Categoiy:W−Wafer
④Welding Board Aagle:V−Straight 180°
⑤Row No.Pin No:03 Pin
⑥Material:PT−PBT
⑦Plating:SN−Tin Plating

| K205001WV−XX−PTSN | PBT | Phosphor Bronze | K205001HM |
|---|---|---|---|
| PART NO | Material | Material(Pin) | Suitable XKB Housing |

| | |
|---|---|
| AuGLAR | ±5° |
| X. | ±0.40 |
| X.x | ±0.30 |
| X.xx | ±0.20 |
| X.xxx | ±0.15 |
| UNSPECIFIED TOLERAuCES | |

XKB Connection 星邦

| | | | |
|---|---|---|---|
| DESIGN | 阿树 | VIEW: | MODEL TYPE: 2.0mm automotive connector |
| CHECKED | | UNIT: mm/in | PART NO.: K205001WV−03−PTSN |
| APPROVED | | SIZE: A4 | DWG NO.: |

XKB INDUSTRIAL PRECISION CO.,LIMITED

| SCALE | PAGE | REVISION |
|---|---|---|
| N/A | 1/2 | A1 |