REVISIONS					
REV.	ECN NO.	LOCATION	DESCRIPTION	DATE	DESIGN
A0	N/A		INITIAL RELEASE	/	/
A1	N/A		图面升级整理图面	2025.06.21	阿树

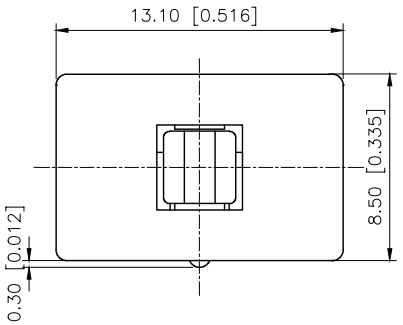

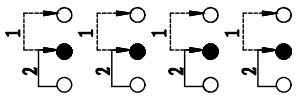

SCHEMATIC

FEATURES
Light operating force
Long termlow con tact resistance
Momentary or lating operation
Short stroke 1.5mm to latch
Compact spacing on PCB of 13X 8.5mm

■ SPEAFICATIONS

1.ELECTRICAL

Con tact rating	0.1A,30VDC
Con tact resistance	50mΩ Max
Insulation resistance	100MΩ Min .at 250VDC
Dielectric strength	250VAC Min .for 60sec

2.MECHANICAL AND ENVIRONMENTAL

●Temperature ratong	Operating −15℃ to +55℃ storage.−25℃to +65℃
● Operation	160±80gf
● Stroke	Lock Stroke .1.5±0.2mm Full stroke,2.5±0.2mm
● Operating life	Full load:1x10^{4}cycles NO load:1x10^{5}cycles
● Con tact form	DPDT

PAPT NO	XKB1385−X
OPERATION	W:NO LOCK Z:LOCK

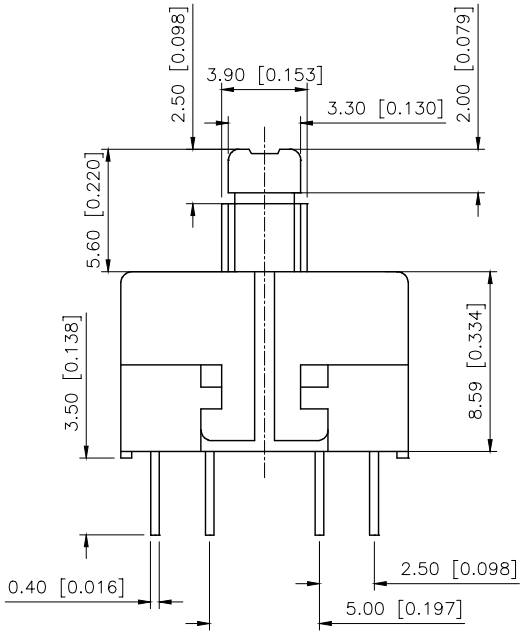

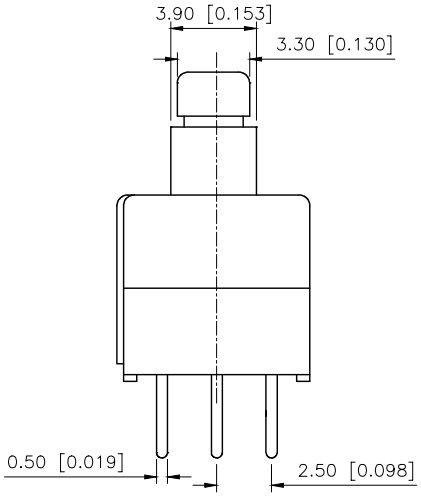

ITEM	PAPT NAMF	QTY	MATERIAL	FINISHING
7	Contact	4	Phosphor Bronze	Plating silvering
6	Terminal	12	Brass	Plating silvering
5	Spring	1	Sus	Natural
4	Base	1	Nylon	
3	Crochet Needle	1	Sus	Natural
2	Cover	1	Nylon	
1	Keystake	1	Nylon	

AuGLAR	±5°
X.	±0.40
X.x	±0.30
X.xx	±0.20
X.xxx	±0.15
UNSPECIFIED TOLERAuCES	

XKB Connection 星坤

DESIGN	阿树	VIEW:	MODEL TYPE: KEY SWITCH
CHECKED		UNIT: mm/in	PART NO.: XKB1385−Z
APPROVED		SIZE: A4	DWG NO.: X−XKB1385−Z

XKB INDUSTRIAL PRECISION CO.,LIMITED

SCALE	PAGE	REVISION
N/A	1/1	A1