REVISIONS					
REV.	ECN NO.	LOCATION	DESCRIPTION	DATE	DESIGN
A0	N/A		INITIAL RELEASE	/	/
A1	N/A		图面升级整理图面	2025.1.3	阿树

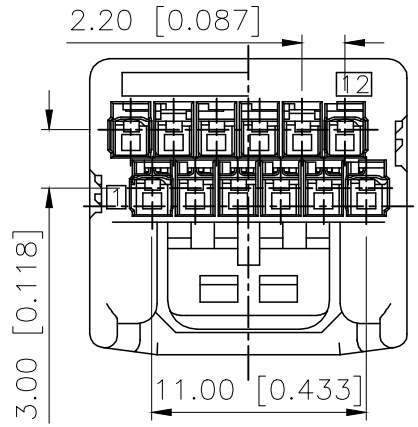

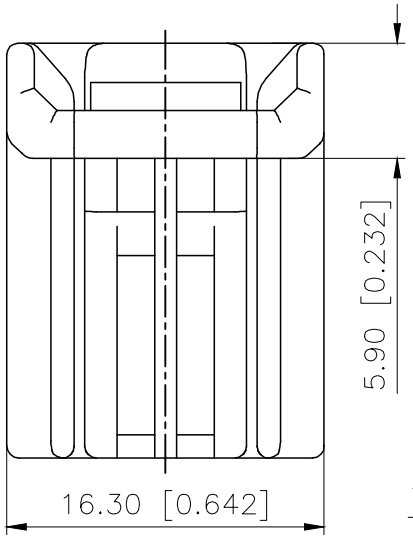

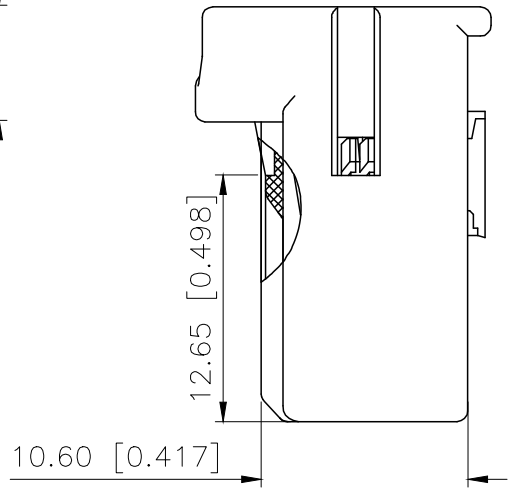

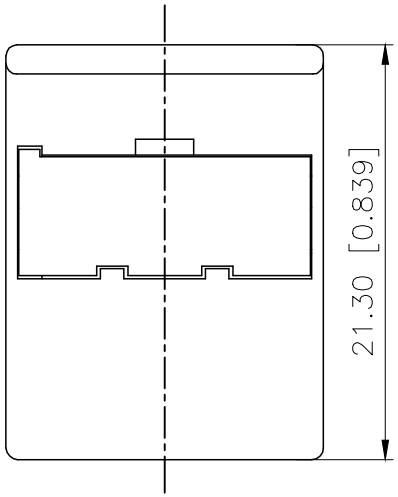

Current rating:3A AC/DC
额定电流：3A AC/DC
Temperature range:−40℃−+125℃
温度范围：−40℃−+125℃

PART NO.:

K 137635 H M−2x06 B−N0
① ② ③ ④ ⑤ ⑥ ⑦

①K:XKBTEK−Car Connector
②XKB Series No
③Category:H−Housing
④Category:M−Male Housing
⑤Row No.Pin No:2x06 Pin
⑥Special No:B−Misaligned foot
⑦Material:N0−PA66 UL 94V−0

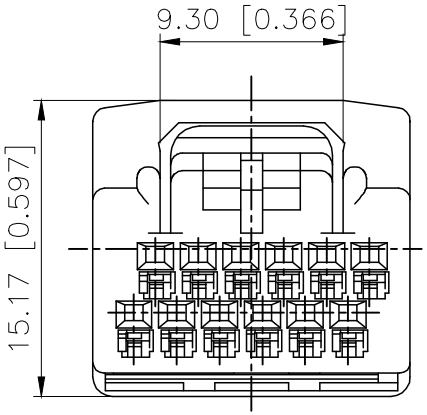

K137635HM−2xXXB−N0	PA66	Gray	K137635TF−B
PART NO	Material	Color	Suitable XKB Terminal

AuGLAR	±5°
X.	±0.40
X.x	±0.30
X.xx	±0.20
X.xxx	±0.15
UNSPECIFIED TOLERAuCES	

XKB Connection 星城

DESIGN	阿树	VIEW:	MODEL TYPE: 2.2mm Automobile connector
CHECKED		UNIT: mm/in	PART NO.: K137635HM−2x06B−N0
APPROVED		SIZE: A4	DWG NO.:

XKB INDUSTRIAL PRECISION CO.,LIMITED

SCALE	PAGE	REVISION
N/A	1/1	A1