REVISIONS					
REV.	ECN NO.	LOCATION	DESCRIPTION	DATE	DESIGN
A0	N/A		INITIAL RELEASE	/	/
A1	N/A		图面升级整理图面	2025.03.05	阿树

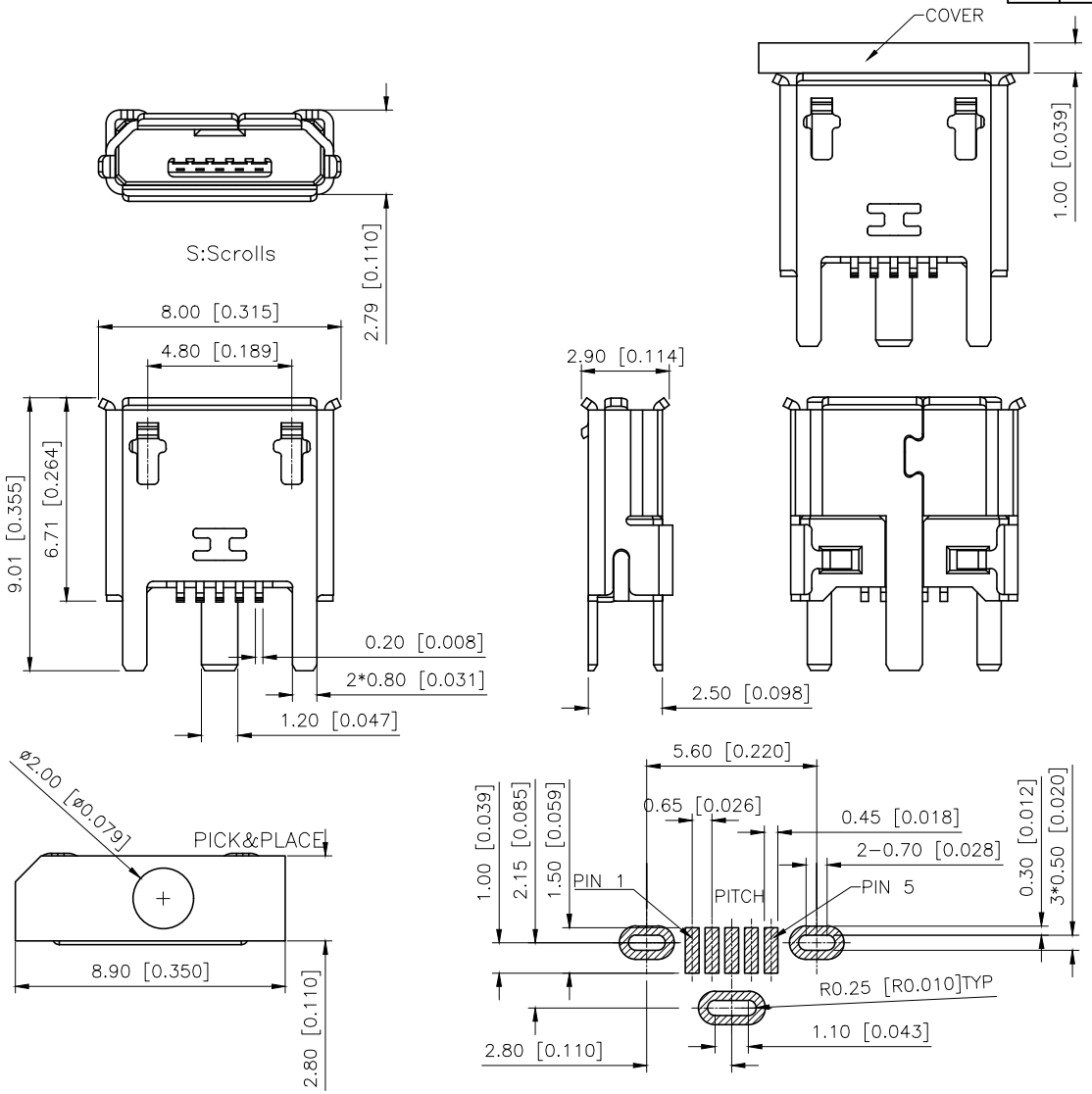

RECOMMEND PCB LAYOUT(THICKNESS=1.6mm)
TOLERANCE: ±0.05

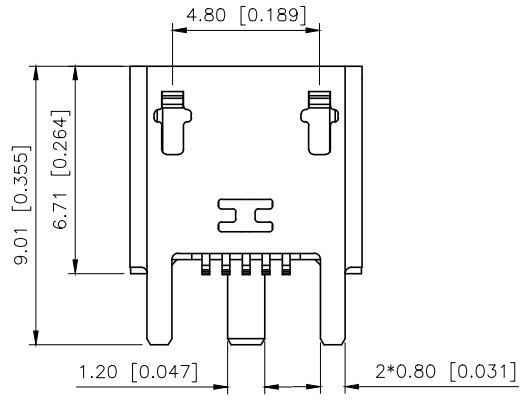

F:Flat

Notes:

Specifications:

1. Current rating: 1 A Max.
2. Dielectric withstanding:voltage: 100V(AC) for 1 min.
3. Contact resistance: 50m Max.
4. Insulation resistance: 100M Min.
5. Total mating force: 3.57 Kgf Max.
6. Total unmating force: 1.0 Kgf Min.0.81~2.05 Kgf Min.after 10000 insertion/extration cycles
7. Temperature range: −30°C~+80°C

Housing Material: LCP UL94V−0, black
Contact Terminal: PHOSPHOR BRONZE
Metallic Shell: SUS

U255−051N−4BH74−SS

- 1:AU 1U"
- 5:AU 15U"
- 6:AU 30U"
- N:NICKEL
- S:Sus
- S:Scrolls F:Flat

AuGLAR	±5°
X.	±0.40
X.x	±0.30
X.xx	±0.20
X.xxx	±0.15
UNSPECIFIED TOLERAuCES	

XKB Connection 星创

DESIGN	阿树	VIEW:	MODEL TYPE: MICRO USB
CHECKED		UNIT: mm/in	PART NO.: U255−051N−4BH74−SS
APPROVED		SIZE: A4	DWG NO.:

XKB INDUSTRIAL PRECISION CO.,LIMITED

SCALE	PAGE	REVISION
N/A	1/1	A1