REVISIONS					
REV.	ECN NO.	LOCATION	DESCRIPTION	DATE	DESIGN
A0	N/A		INITIAL RELEASE	/	/
A1	N/A		图面升级整理图面	2025.05.17	阿树

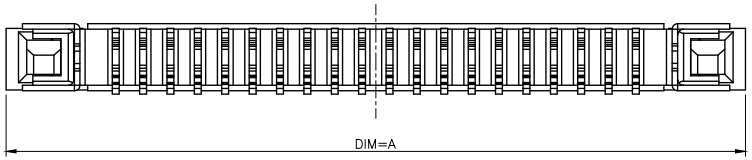

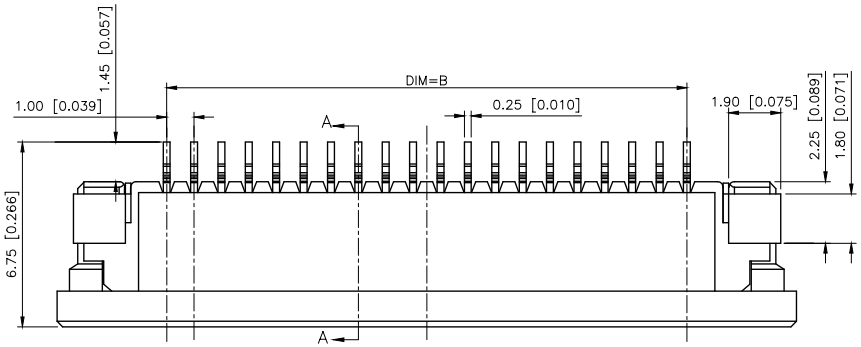

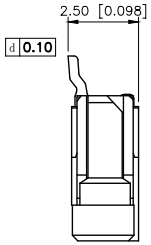

PART NO.:

X10B25 U 24 G
① ② ③ ④

①Series Name:X10B25=1.00mm Pitch(H:2.50mm)
②Assembly style : L:Low Contact SMT Type
U:Upper Contact SMT Type
D:Double-Face Contact SMT Type
H:Back-flip Double-Face Contact SMT Type
③Number of terminals :XX=04-40PIN

④Plating : G:Gold Flash Over Nickel
T:Tin Over Nickel

3.PERFORMANCE
3.1: CURRENT RATING:0.5A/PIN
3.2: VOLTAGE RATING:50V (AC/DC)
3.3:CONTACT RESISTANCE:INITAL VALUE 30mOHM MAX.
3.4:INSULATON RESISTANCE:500MOHM in.
3.5:DIELECTRIC WITHSTANDING VOLTAGE:250V AC FOR 1MINUTE
3.6: DURABILITY: 20 TIMES Min.
3.7:OPERATING TEMPERATURE:-40℃+85℃
OPERUTING HUMIDITY RANGE: 20% TO 85%

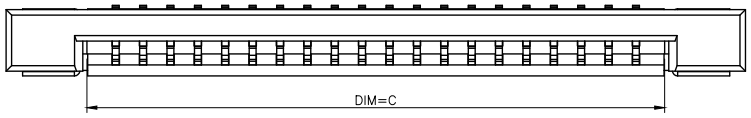

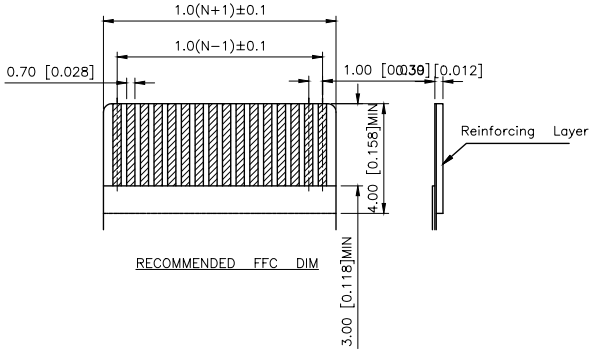

RECOMMENDED FFC DIM

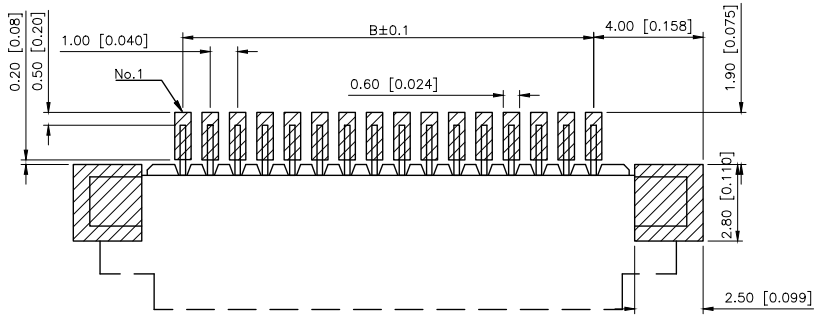

RECOMMENDED PCB LAYOUT

No. of Contacts	DIMENSIONS			No. of Contacts			
	DIM A	DIM B	DIMC		DIM A	DIM B	DIMC
4	11.00	3.00	5.10	23	30.00	22.00	24.10
5	12.00	4.00	6.10	24	31.00	23.00	25.10
6	13.00	5.00	7.10	25	32.00	24.00	26.10
7	14.00	6.00	8.10	26	33.00	25.00	27.10
8	15.00	7.00	9.10	27	34.00	26.00	28.10
9	16.00	8.00	10.10	28	35.00	27.00	29.10
10	17.00	9.00	11.10	29	36.00	28.00	30.10
11	18.00	10.00	12.10	30	37.00	29.00	31.10
12	19.00	11.00	13.10	31	38.00	30.00	32.10
13	20.00	12.00	14.10	32	39.00	31.00	33.10
14	21.00	13.00	15.10	33	40.00	32.00	34.10
15	22.00	14.00	16.10	34	41.00	33.00	35.10
16	23.00	15.00	17.10	35	42.00	34.00	36.10
17	24.00	16.00	18.10	36	43.00	35.00	37.10
18	25.00	17.00	19.10	37	44.00	36.00	38.10
19	26.00	18.00	20.10	38	45.00	37.00	39.10
20	27.00	19.00	21.10	39	46.00	38.00	40.10
21	28.00	20.00	22.10	40	47.00	39.00	41.10
22	29.00	21.00	23.10				

AuGLAR	±5°
X.	±0.40
X.x	±0.30
X.xx	±0.20
X.xxx	±0.15
UNSPECIFIED TOLERAuCES	

XKB Connection 星创

DESIGN	阿树	VIEW:	MODEL TYPE: FPC CONNECTOR
CHECKED		UNIT: mm/in	PART NO.: X10B25U24G
APPROVED		SIZE: A4	DWG NO.: X10B25U24G

XKB INDUSTRIAL PRECISION CO.,LIMITED

SCALE	PAGE	REVISION
N/A	1/1	A1

www.helloxkb.com www.helloxkb.cn www.xk-dg.cn